GENERAL NOTES

1. PRIOR TO SUBMITTING COST PROPOSAL, THE CONTRACTOR/OWNER SHALL VERIFY EXISTING CONDITIONS ON SITE & REVIEW MODIFICATIONS AND DIMENSIONS REQUIRED TO SUIT THE CONTRACT DOCUMENTS.
2. CONTRACT DOCUMENTS ARE COMPLEMENTARY, WHAT IS CALLED FOR ON ANY DOCUMENT WILL BE BINDING AS IF CALLED FOR ON ALL DOCUMENTS. ALL WORK SHOWN OR REFERENCED ON ANY CONSTRUCTION DOCUMENT SHALL BE PROVIDED AS THOUGH SHOWN ON ALL RELATED DOCUMENTS.
3. THE CONTRACTOR/OWNER SHALL EXAMINE, READ AND BE THOROUGHLY FAMILIAR WITH ALL OF THE CONTRACT DOCUMENTS. SHOULD THE CONTRACTOR/OWNER FIND DISCREPANCIES IN OR OMISSIONS FROM THE DRAWINGS AND SPECIFICATIONS, OR SHOULD BE IN DOUBT AS TO THEIR INTENT OR MEANING, HE SHALL NOTIFY THE ARCHITECT IMMEDIATELY FOR CLARIFICATION OR INTERPRETATION.
4. SHOULD A DISCREPANCY APPEAR IN DRAWINGS OR SPECIFICATIONS, OR IN WORK DONE BY OTHERS AFFECTING THIS WORK, NOTIFY JM3DESIGN AT ONCE FOR INSTRUCTION AS TO PROCEDURE. IF CONTRACTOR/OWNER PROCEEDS WITH WORK AFFECTED WITHOUT INSTRUCTION FROM THE DESIGNER, THE CONTRACTOR SHALL MAKE GOOD ANY RESULTING DAMAGE OR DEFECT.
5. SHOULD CONFLICT OCCUR IN OR BETWEEN DRAWINGS AND SPECIFICATION OR WHERE DETAIL REFERENCES ON CONTRACT DRAWINGS HAVE BEEN OMITTED, CONTRACTOR/OWNER IS DEEMED TO HAVE ESTIMATED THE MOST EXPENSIVE MATERIALS AND CONTRACTOR INVOLVED.
6. ALL WORK SHALL MEET FEDERAL, STATE AND LOCAL BUILDING CODES AND ORDINANCES IN EFFECT AT THE TIME OF CONSTRUCTION IN ADDITION TO ADA REQUIREMENTS. SOLE REFERENCE SHALL MEET THE EDITIONS SPECIFIED ON THIS SHEET AND AS AMENDED BY THE STATE OF CALIFORNIA AND LOCAL JURISDICTION.
7. CONTRACTOR/OWNER SHALL CONFIRM DURING THE PRICING PERIOD ON-SITE DELIVERY DATES OF ALL MATERIALS SPECIFIED IN THE CONTRACT DOCUMENTS AND IMMEDIATELY NOTIFY THE DESIGNER IN WRITING OF POTENTIAL DELAYS TO THE COMPLETION OF THE PROJECT. IF THE CONTRACTOR/OWNER FAILS TO ORDER MATERIALS IN SUFFICIENT TIME FOR ORDERLY INSTALLATION, THE DESIGNER WILL NOT ENTERTAIN ANY REQUESTS FOR MATERIAL SUBSTITUTION.
8. THE CONTRACTOR SHALL REMOVE ALL RUBBISH AND WASTE MATERIALS ON A REGULAR BASIS, AND SHALL EXERCISE STRICT CONTROL OVER JOB CLEANING TO PREVENT ANY DIRT, DEBRIS OR DUST FROM AFFECTING FINISHED AREAS IN OR OUTSIDE OF THE JOB SITE. THE BUILDING REFUSE FACILITIES SHALL NOT BE USED FOR THIS PURPOSE WITHOUT PERMISSION FROM BUILDING OWNER.
9. THE CONTRACTOR SHALL CONFINE OPERATIONS AT THE SITE TO AREAS PERMITTED BY LAW, ORDINANCES, PERMITS AND CONTRACT DOCUMENTS, AND SHALL NOT UNREASONABLY ENCUMBER THE SITE WITH ANY MATERIALS OR EQUIPMENT.
10. THE CONTRACTOR SHALL LEAVE THE PREMISES AND ALL AREAS CLEAN AND IN AN ORDERLY MANNER READY FOR OCCUPANCY AT THE END OF THE PROJECT.
11. THE CONTRACTOR/OWNER SHALL SUBMIT TO THE OWNER FOR APPROVAL, A DETAILED CONSTRUCTION SCHEDULE SHOWING PHASING AND TIME ALLOTMENT OF WORK.
12. THE CONTRACTOR/OWNER, OR SUBCONTRACTORS, SHALL SECURE AND PAY FOR ALL PERMITS, GOVERNMENTAL FEES AND LICENSES REQUIRED FOR PROPER COMPLETION OF THE
13. NO PORTION OF THE WORK REQUIRING A SHOP DRAWING OR SAMPLE SUBMISSION SHALL BE COMMENCED UNTIL THE SUBMISSION HAS BEEN REVIEWED AND ACTED UPON BY THE ARCHITECT ALL SUCH PORTIONS OF THE WORK SHALL BE IN ACCORDANCE WITH THE REVIEWED SHOP DRAWINGS AND SAMPLES.
14. CONSTRUCTION LIABILITY: CONSTRUCTION CONTRACTOR AND HIS SUBCONTRACTORS AGREE THAT IN ACCORDANCE WITH GENERALLY ACCEPTED CONSTRUCTION PRACTICES, CONSTRUCTION CONTRACTOR AND HIS SUBCONTRACTORS WILL BE REQUIRED TO ASSUME SOLE AND COMPLETE RESPONSIBILITY FOR JOB SITE CONDITIONS DURING THE COURSE OF CONSTRUCTION OF THE PROJECT, INCLUDING SAFETY OF ALL PERSONS AND PROPERTY, THAT THIS REQUIREMENT SHALL BE MADE TO APPLY CONTINUOUSLY AND NOT LIMITED TO NORMAL WORKING HOURS, AND CONSTRUCTION CONTRACTOR AND HIS SUBCONTRACTORS FURTHER AGREE TO DEFEND, INDEMNIFY AND HOLD DESIGN PROFESSIONAL HARMLESS FROM AND ALL LIABILITY, REAL OR ALLEGED, IN CONNECTION WITH THE PERFORMANCE OF WORK ON THIS PROJECT, EXCEPT LIABILITY ARISING FROM THE SOLE NEGLIGENCE OF DESIGN PROFESSIONAL.
15. DATUM IS SET AT +0'-0" FOR REFERENCE PURPOSES (TOP OF SLAB) ALL ELEVATIONS SHOWN ON PLANS, ELEVATIONS AND SECTIONS (EXCEPT FOR GRADING PLANS) ARE REFERENCED TO THIS DATUM.
16. CONTRACTOR/OWNER SHALL BE RESPONSIBLE FOR ACCURATE LOCATION OF PLOT LINES, BOUNDARIES, AND FOR MAINTAINING PROPER RELATIONSHIPS TO SUCH AS INDICATED ON CIVIL DRAWINGS IF APPLICABLE.
17. THE CONTRACTOR/OWNER SHALL PROVIDE POSITIVE DRAINAGE OF SURFACE WATER WITHOUT PONDING OF WATER ADJACENT TO BUILDING OR ON PAVEMENTS. DRAINAGE OF PAVED AREAS TO BE AS SHOWN ON CIVIL ENGINEER'S DRAWINGS.
18. ALL PATCHING, REPAIRING AND REPLACING OF MATERIALS AND SURFACES CUT OR DAMAGED IN EXECUTION OF WORK SHALL BE DONE WITH APPLICABLE MATERIALS SO THAT SURFACES REPLACED WILL, UPON COMPLETION, MATCH SURROUNDING SIMILAR SURFACES.
19. ALL VENTS THROUGH ROOF SHALL BE KEPT AT A MINIMUM HEIGHT CONSISTENT WITH APPLICABLE CODES.
20. ALL OPEN JOINTS, PENETRATIONS AND OTHER OPENINGS IN THE BUILDING ENVELOPE SHALL BE SEALED, CAULKED, GASKETED OR WEATHERSTRIPPED TO LIMIT AIR LEAKAGE.
21. ELECTRICAL, MECHANICAL, AND PLUMBING SYSTEMS ARE "DESIGN/BUILD." PERFORMANCE SPECIFICATIONS AS WELL AS EQUIPMENT SIZES ARE TO BE REVIEWED BY THE DESIGNER AND OWNER PRIOR TO THE COMMENCEMENT OF ANY WORK.
22. ALL MECHANICAL, ELECTRICAL AND PLUMBING LOCATIONS SHOWN ON DESIGNERS PLANS ARE FOR DESIGN INTENT ONLY. ALL ELECTRICAL, MECHANICAL AND PLUMBING WORK ARE TO BE PROVIDED AS PART OF THIS PACKAGE PER THE LOCAL JURISDICTION.
23. PLUMBING AND EQUIPMENT VENTING: WHERE FEASIBLE, VENT ALL PLUMBING FIXTURES, EXHAUST VENTS, FURNACE, AND WATER HEATER TO ROOF. VERIFY ALL LOCATIONS OF VENTS WITH DESIGNER AND OWNER PRIOR TO INSTALLATION.
24. PROVIDE WATER-RESISTANT GYPSUM BOARD AT ALL BATH, TOILET, AND LAUNDRY ROOM WALLS THAT WILL BE PAINTED. PROVIDE WONDER BOARD AT ALL WALL AND CEILING SURFACES THAT MAY BE FINISHED WITH TILE OR STONE.
25. THE CONTRACTOR/OWNER SHALL COORDINATE ALL WORK WITH MECHANICAL, ELECTRICAL AND PLUMBING DRAWINGS, AND REPORT TO JM3DESIGN OR OWNER REPRESENTATIVE ANY DISCREPANCIES FOR CORRECTION OR ADJUSTMENT. NO ALLOWANCE WILL BE MADE FOR INCREASED COSTS INCURRED DUE TO LACK OF PROPER COORDINATION.
26. NOISE REDUCTION: CONSTRUCTION CONTRACTORS SHALL MUFFLE AND SHIELD INTAKES AND EXHAUSTS, SHROUD OR SHIELD IMPACT TOOLS, AND USE ELECTRIC-POWERED RATHER THAN DIESEL-POWERED CONSTRUCTION EQUIPMENT (AS FEASIBLE). ALL STATIONARY NOISE-GENERATING EQUIPMENT SHALL BE LOCATED AS FAR AWAY AS POSSIBLE FROM NEIGHBORING PROPERTY LINES. ALL CONSTRUCTION EQUIPMENT SHALL BE MAINTAINED AND OPERATED ACCORDING TO MANUFACTURER'S MAINTENANCE SCHEDULES AND RECOMMENDATIONS TO MINIMIZE NOISE AND EXHAUST EMISSIONS (PARTICULARLY NITROGEN OXIDES).
27. CONTRACTOR/OWNER TO COORDINATE WITH OWNER FOR OWNER-PROVIDED MATERIALS AND PRODUCTS.
28. ANY AND ALL MATERIALS SUPPLIED BY OWNER SHALL BE INSTALLED BY CONTRACTOR/OWNER (I.B.C.), UNLESS OTHERWISE NOTED. CONTRACTOR/OWNER SHALL COORDINATE WITH OWNER FOR REQUIRED SCHEDULING AND ORDERING INFORMATION. CONTRACTOR/OWNER SHALL ASSIST IN DETERMINING QUANTITIES WHEN REQUIRED.
29. FOR ALL MATERIALS PROVIDED BY CONTRACTOR/OWNER WHICH REQUIRE COLOR OR FINISH SELECTION, CONTRACTOR/OWNER SHALL CONTACT DESIGNER AND OWNER FOR ALL DECISIONS.
30. ADEQUATE PREPARATION OF THE SUBSTRATE IS IMPERATIVE TO PROPER BONDING OF THE PAINT. PREP EACH SUBSTRATE AS RECOMMENDED BY MANUFACTURER. THOROUGHLY
31. ALL WOOD SHALL BE PAINTED AS FOLLOWS: EXTERIOR - THREE COAT (STAIN AND SEAL WHERE INDICATED), INTERIOR: TWO COAT (STAIN AND SEAL WHERE INDICATED)
32. COLORS WILL BE PROVIDED AND SELECTED BY OWNER. FINAL ACCEPTANCE OF COLORS WILL BE FROM JOB-APPLIED SAMPLES. PROVIDE FULL-COAT FINISH SAMPLES ON SURFACE WITH A MINIMUM SIZE OF 25 S.F. FOR APPROVAL BY OWNER.
33. INSTALLATION INSTRUCTIONS FOR ALL LISTED EQUIPMENT SHALL BE PROVIDED TO THE FIELD INSPECTOR AT TIME OF INSPECTION. CMC 303.1.
34. PER SECTION 704A.5.1. DETACHED ACCESSORY STRUCTURES SHALL COMPLY WITH REQUIREMENTS OF CHAPTER 7A FOR ALL PROJECTS LOACTED IN THE WILDLAND URBAN INTERFACE.
35. ROOFING ASSEMBLIES
    A. ROOFING ASSEMBLIES SHALL BE DESIGNED TO PREVENT THE INTRUSION OF FLAMES AND EMBERS BETWEEN THE ROOF COVERING AND THE ROOF DECKING.
    B. ROOF VALLEY FLASHING SHALL BE MADE OF NOT LESS THAN 26-GAUGE GALVANZIED SHEET METLA INSLALLED OVER A MINIMUM 36" WIDE UNDERLAYMENT OF ONE LAYER OF 72" CAP SHEET RUNNING THE FULL LENGTH OF THE VALLEY.
    C. ROOF GUTTERS SHALL BE DESIGNED TO PREVENT THE ACCUMULATION OF LEAVES AND DEBRIS INTHE GUTTER.
36. ATTIC VENTILATION
    A. ROOF ATTIC VENTS SHALL BE DESIGNED TO RESIST THE INTRUSION OF FLAMES AND EMBERS INTO THE ATTIC OF A STRUCTURE, OR SHALL BE PROTECTED WITH CORROSION RESISTANT, NONCOMBUSTIBLE WIRE MESH WITH 1/4" OPENINGS, OR EQUIVALENT.
    B. EAVE AND CORNICE VENTS SHALL BE DESIGNED TO RESIST THE INTRUSION OF FLAMES AND EMBERS INTO THE ATTIC OF A STRUCTURE, OR SHALL BE PROTECTED WITH CORROSION-RESISTANT, NONCOMBUSTIBLE WIRE MESH WITH 1/4" OPENINGS, OR EQUIVALENT.
    C. EAVE PROTECTION - EAVES AND SOFFITS SHALL BE PROTECTED BY IGNITION-RESISTANT MATERIALS OR NONCOMBUSTIBLE CONSTRUCTION ON THE EXPOSED UNDERSIDE.
37. EXTERIOR WALLS
    A. EXTERIOR WALLS SHALL BE DESIGNED USING IGNITION-RESISTANT MATERIALS, NONCOMBUSTIBLE CONSTRUCTION, HEAVY TIMBER, LOG WALL COSTRUCTION OR EQUIVALENT.
    B. EXTERIOR WALL COVERINGS SHALL EXTEND FROM THE TOP OF THE FOUDATION TO THE ROOF, AND TERMINATE AT 2" NOMINAL SOLID WOOD BLOCKING BETWEEN RAFTERS AT ALL ROOF OVERHANGS, OR TERMINATE ATE AT AN EAVE ENCLOSURE.
    C. EXTERIOR WALL VENTS SHALL BE DESIGNED TO RESIST INTRUSION OF FLAME AND EMBERS INTO THE STRUCTURE, OR SHALL BE PROTECTED WITH A CORROSION RESISTANT, NONCOMBUSTIBLE WIRE MESH WITH 1/4" OPENINGS, OR EQUIVALENT.
    D. EXTERIOR WINDOW, WINDOW WALL, AND GLAZED DOOR ASSEMBLIES SHALL HAVE A 20-MINUTE FIRE-RESISTANT RATING, OR BE DESIGNED USING INSULATING-GLASS UNITS WITH A MINUMUM OF ONE TEMPERED PANE, OR GLASS BLOCK UNITS.
    E. EXTERIOR DOOR ASSEMBLIES SHALL HAVE A 20-MINUTE FIRE RESISTANT RATING, OR BE DESIGNED USING NONCOMBUSTIBLE CONSTRUCTION, OR BE CONSTRUCTED OF SOLID-CORE WOOD HAVING STILES AND RAILS NOT LESS THAN 1 3/8" THICK, AND FIELD PANELS NOT LESS THAN 1 14" THICK.
    F. EXTERIOR VEHICLE ACCESS DOORS SHALL BE NON-COMBUSTIBLE OR EXTERIOR FIRE-RETARDANT TREATED WOOD.
38. THE CONSTRUCTION SHALL NOT RESTRICT A FIVE FOOT CLEAR AND UNOBSTRUCTED ACCESS TO ANY WATER OR POWER DISTRIBUTION FACILITIES (POWER POLES, PULL BOXES, TRANSFORMERS, VAULTS, PUMPS, VALVES, METERS, APPURTENANCES, ETC.)OR THE LOCATION OF THE HOOK UP . THE CONSTRUCTION SHALL NOT BE WITHIN TEN FEET OF ANY POWER LINES WHETHER OR NOT THE LINES ARE LOCATED ON THE PROPERTY. FAILURE TO COMPLY MAY CAUSE CONSTRUCTION DELAYS AND/OR ADDITIONAL EXPENSES.
39. AN APPROVED SEISMIC GAS SHUTOFF VALVE WILL BE INSTALLED ON THE FUEL GAS LINE ON THE DOWNSTREAM SIDE OF HE UTILITY METER AND BE RIGIDLY CONNECTED TO THE EXTERIOR OF THE BUILDING OR STRUCTURE CONTAINING THE FUEL GAS PIPING. (PER ORDINANCE 170,158) (SEPARATE PLUMBING PERMIT IS REQUIRED).
40. PLUMBING FIXTURES ARE REQUIRED TO BE CONNECTED TO A SANITARY SEWER OR TO AN APPROVED SEWAGE DISPOSAL SYSTEM (R306.3).
41. KITCHEN SINKS, LAVATORIES , BATHTUBS, SHOWERS, BIDETS, LAUNDRY TUBS AND WASHING MACHINE OUTLETS SHALL BE PROVIDED WITH HOT AND COLD WATER AND CONFECTED TO AN APPROVED WATER SUPPLY (R306.4)
42. BATHTUB AND SHOWER FLOORS , WALLS ABOVE BATHTUBS WITH A SHOWERHEAD , AND SHOWER COMPARTMENTS SHALL BE FINISHED WITH A NONABSORBENT SURFACE. SUCH WALL SURFACED SHALL EXTEND TO A HEIGHT OF NOT LESS THAN 6 FEET ABOVE THE FLOOR (R307.2).
43. PROVIDE ULTRA-LOW FLUSH WATER CLOSETS FOR ALL NEW CONSTRUCTION. EXISTING SHOWER HEADS ND TOILETS MUST BE ADAPTED FOR LOW WATER CONSUMPTION.
44. WATER HEATER MUST BE STRAPPED TO WALL .
45. AUTOMATIC GARAGE DOOR OPENERS, IF PROVIDED, SHALL BE LISTED IN ACCORDANCE WITH UL 325. (R309.4).
46. SMOKE DETECTORS SHALL BE PROVIDED FOR ALL DWELLING UNITS INTENDED FOR HUMAN OCCUPANCY ,WHERE A PERMIT IS REQUIRED FOR ALTERATIONS, REPAIRS, OR ADDITIONS. (R314.6.2).
47. WHERE A PERMIT IS REQUIRED OR ALTERATIONS ,REPAIRS OR ADDITIONS ,EXISTING DWELLING OR SLEEPING UNITS THAT HAVE ATTACHED GARAGES OR FUEL-BURNING APPLIANCES SHALL BE PROVIDED WITH A CARBON MONOXIDE ALARM IN ACCORDANCE WITH SECTION R315.2. CARBON MONOXIDE ALARMS SHALL ONLY BE REQUIRED IN THE SPECIFIC DWELLING UNIT OR SLEEPING UNIT FOE WHICH THE PERMIT WAS OBTAINED. (R315.2.2).
48. EVERY SPACE INTENDED FOR HUMAN OCCUPANCY SHALL BE PROVIDED WITH NATURAL LIGHT BY MEANS OF EXTERIOR GLAZED OPENINGS IN ACCORDANCE WITH SECTION R303.1 OR SHALL BE PROVIDED WITH ARTIFICIAL LIGHT THAT IS ADEQUATE TO PROVIDE AN AVERAGE ILLUMINATION OF 6 FOOT CANDLES OVER THE AREA OF THE ROOM AT A HEIGHT OF 30 INCHED ABOVE THE FLOOR LEVEL (R303.1).
49. A COPY OF THE EVALUATION REPORT AND/OR CONDITIONS OF LISTING SHALL BE MADE AVAILABLE AT THE JOB SITE.

ARCHITECTURAL SYMBOLS LEGEND

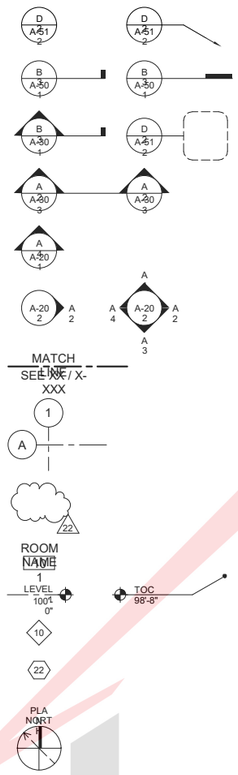

DETAIL INDICATOR - REFERENCE & DETAIL INDICATOR - ITEM

DETAIL INDICATOR - SECTION & DETAIL INDICATOR - SECTION ITEM

SECTION INDICATOR - PARTIAL BUILDING/WALL & DETAIL INDICATOR - AREA

SECTION INDICATOR - BUILDING

ELEVATION INDICATOR - EXTERIOR

ELEVATION INDICATOR - INTERIOR, SINGLE & MULTIPLE VIEW

MATCH LINE INDICATOR

REFERENCE GRID WITH REFERENCE GRID LINES

REVISION INDICATOR & REVISION CLOUD

ROOM IDENTIFIER WITH ROOM NAME & NUMBER

ELEVATION INDICATOR - LEVEL & SPOT

WINDOW OR LOUVER IDENTIFIER

KEYNOTE INDICATOR

PLAN NORTH & TRUE NORTH INDICATOR

SHEET INDEX

A-103	ELEVATIONS
A-105	ROOF PLAN
P-101	PLUMBING DESIGN
S-101	FOUNDATION PLAN
S-102	ROOF FRAMING
S-103	WALL FRAMING
S-104	FRAMING DETAILS

GENERAL

A-001	COVER SHEET
A-002	TITLE 24

ARCHITECTURAL

A-101	FLOOR PLAN
E-101	ELECTRICAL PLAN
A-102	ELEVATIONS
A-104	BUILDING SECTIONS & EXTERIOR DECK DETAILS
A-106	GENERAL NOTES & TYPICAL DETAILS

CODES & REGULATIONS

TITLE 24: (PART 2) 2019 CALIFORNIA BUILDING CODE
TITLE 24: (PART 2.5) 2019 CALIFORNIA RESIDENTIAL CODE
TITLE 24: (PART 3) 2019 CALIFORNIA ELECTRICAL CODE
TITLE 24: (PART 4) 2019 CALIFORNIA MECHANICAL CODE
TITLE 24: (PART 5) 2019 CALIFORNIA PLUMBING CODE
TITLE 24: (PART 6) 2019 CALIFORNIA ENERGY CODE
TITLE 24: (PART 9) 2019 CALIFORNIA FIRE CODE
TITLE 24: (PART 11) 2019 CALIFORNIA GREEN BUILDING STANDARDS

SCOPE OF PROJECT

THE PROJECT CONSISTS OF RAISING THE CEILING OF THE KITCHEN/DINING/LIVING ROOM. A PARTIAL WALL REMOVAL OF AN INTERIOR PARTITION IN THE KITCHEN. RECONFIGURING BOTH BATHROOMS. THE REPLACEMENT OF ALL WINDOWS, SOME OF WHICH WILL BE ENLARGED. REPLACEMENT AND ENLARGEMENT OF THE PATIO DOOR. PATIO DECK EXPANSION (NO CHANGE IN SETBACK DIMENSIONS). PART OF (E) GARAGE SPACE TO BE CONVERTED INTO PANTRY/ LAUNDRY ROOM.

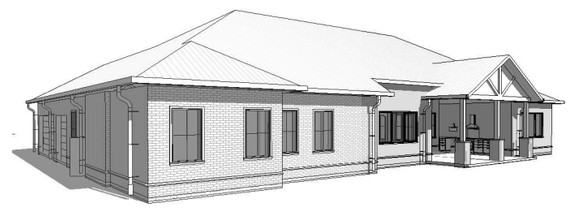

16475 CIRCLE DR

PERMIT SET

REV	DATE	REMARKS

SIGN DATE: 06/11/2021
DATE: 06/11/2021
SCALE: AS NOTED
DRAWN BY: AJ
CKD BY:
PROJECT#: 202103130

A-001

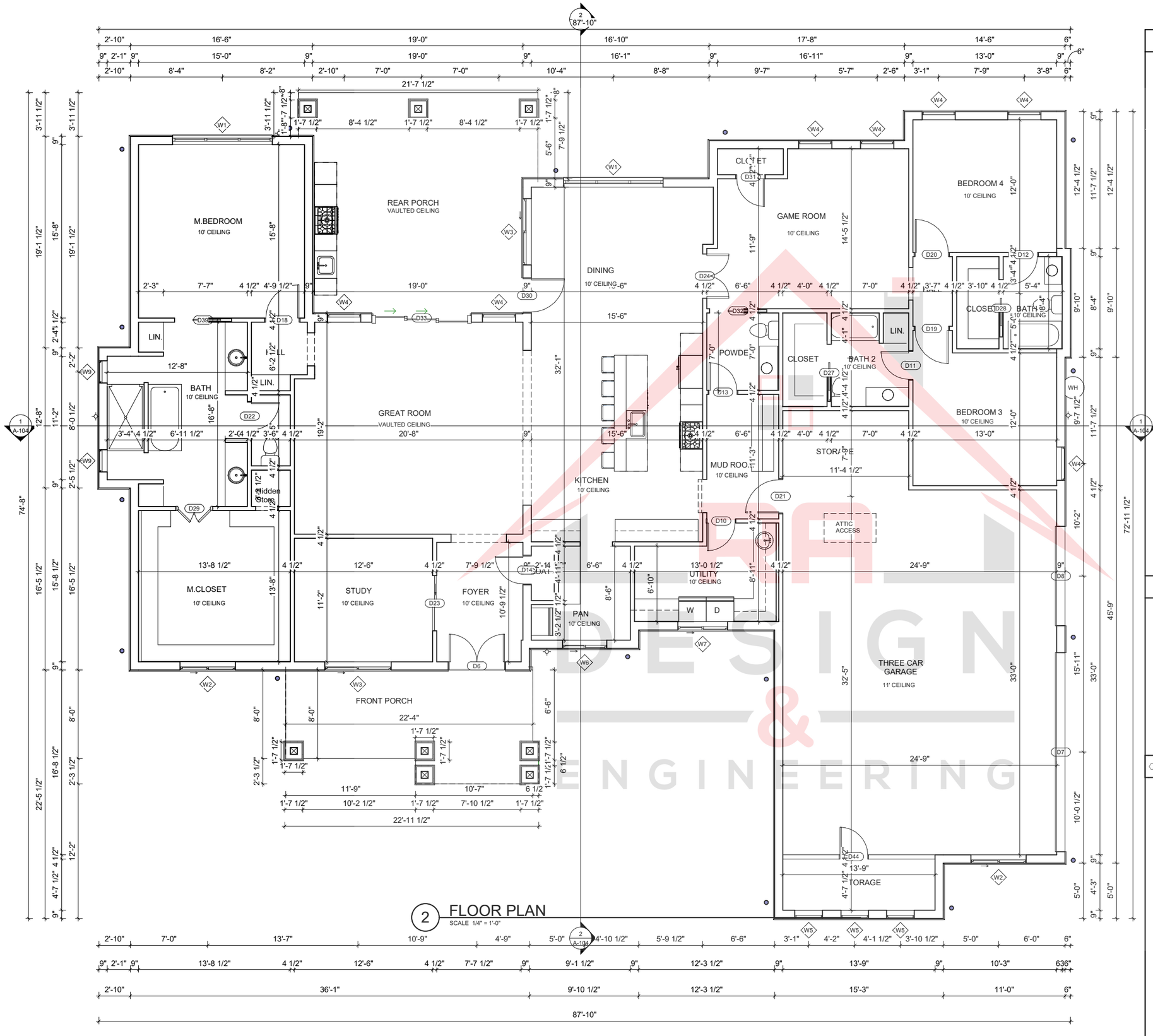

2 FLOOR PLAN
SCALE 1/4" = 1'-0"

FLOOR PLAN LEGEND

- PARTITION TYPE INDICATOR
- WINDOW OR LOUVER IDENTIFIER
- KEYNOTE INDICATOR
- FURNITURE, FIXTURE & EQUIPMENT INDICATOR
- SIGNAGE INDICATOR
- DOOR OPENING IDENTIFIER
- PLAN NORTH & TRUE NORTH INDICATOR
- (N) DOOR
- DOOR TO BE DEMOLISHED
- (E) DOOR
- (E) 20" X 30" ATTIC ACCESS
- (E) FAN 50 CFM EXHAUSTED DIRECTLY TO THE OUTSIDE
- RECESSED LIGHTING
- OUTLET
- GFCI
- QUAD OUTLET
- SWITCH (X) MULTIWAY
- NEW DECK, MATCH AND ALIGN WITH (E) DECK

WALL ASSEMBLY LEGEND

- NEW INTERIOR WALL OF 2X4 @ 16" O.C. WOOD STUDS W/ 1 LAYER OF 5/8 GYP.BD. ON BOTH SIDES. TYP "X" GYM BD WHEN ADJACENT TO GARAGE.
- NEW EXTERIOR WALL OF 2X4 @ 16" O.C. WOOD STUDS W/ 1 LAYER OF 5/8 GYP.BD. ON THE INTERIOR SIDE & VERTICAL SIDING TO MATCH (E) ON THE EXTERIOR SIDE
- (E) EXTERIOR OR INTERIOR WALL TO REMAIN
- (E) WALL TO BE DEMOLISHED

NOTE:
ALL WALLS ARE EXISITING TO REMAIN, UNLESS NOTED OTHERWISE ON PLANS OR ELEVATIONS.

○SHEET...

○SHEET...

16475 CIRCLE DR

PERMIT SET

REV	DATE	REMARKS

SIGN DATE:	06/11/2021
DATE:	06/11/2021
SCALE:	AS NOTED
DRAWN BY:	AJ
CKD BY:	
PROJECT#:	202103130

A-101

2 FRONT ELEVATION
SCALE 1/4" = 1'-0"

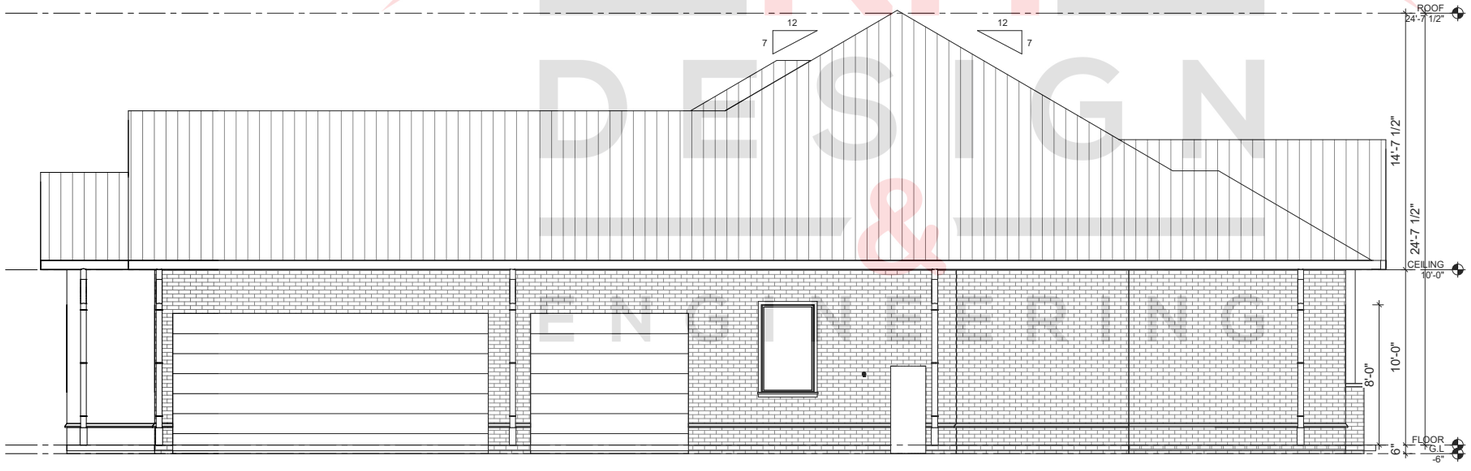

4 RIGHT ELEVATION
SCALE 1/4" = 1'-0"

RA DESIGN & ENTERPRISES GROUP

16475 CIRCLE DR

PERMIT SET

REV	DATE	REMARKS

SIGN DATE: 06/11/2021

DATE: 06/11/2021

SCALE: AS NOTED

DRAWN BY: AJ

CKD BY:

PROJECT#: 202103130

A-201

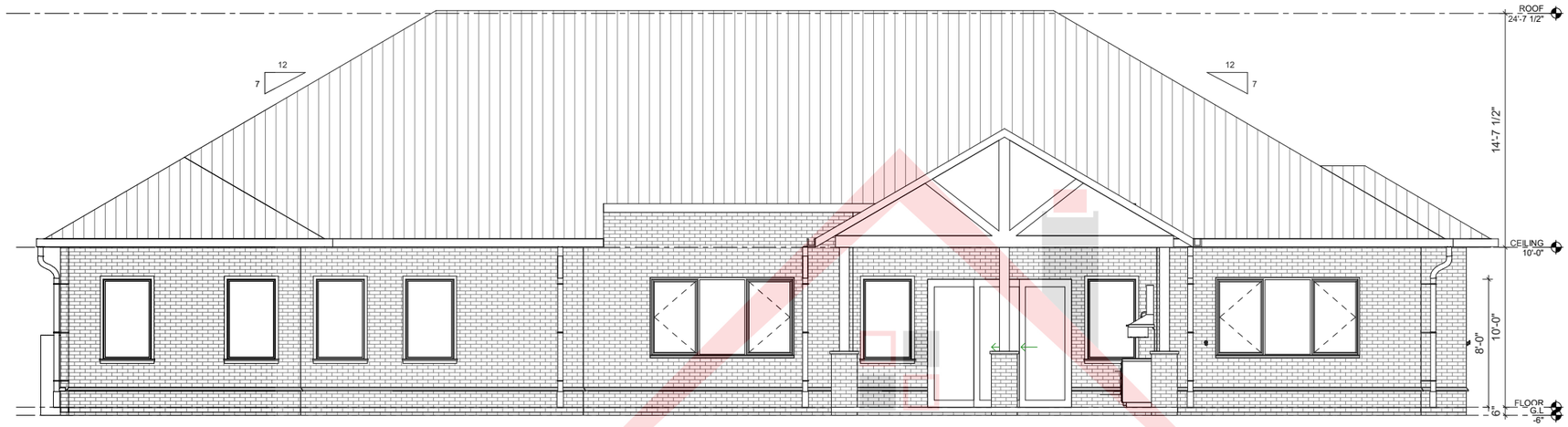

1 REAR ELEVATION

SCALE 1/4" = 1'-0"

2 LEFT ELEVATION

SCALE 1/4" = 1'-0"

LRA DESIGN & ENGINEERING

16475 CIRCLE DR

PERMIT SET

REV	DATE	REMARKS

SIGN DATE:

DATE:

SCALE:

DRAWN BY:

CKD BY:

PROJECT#:

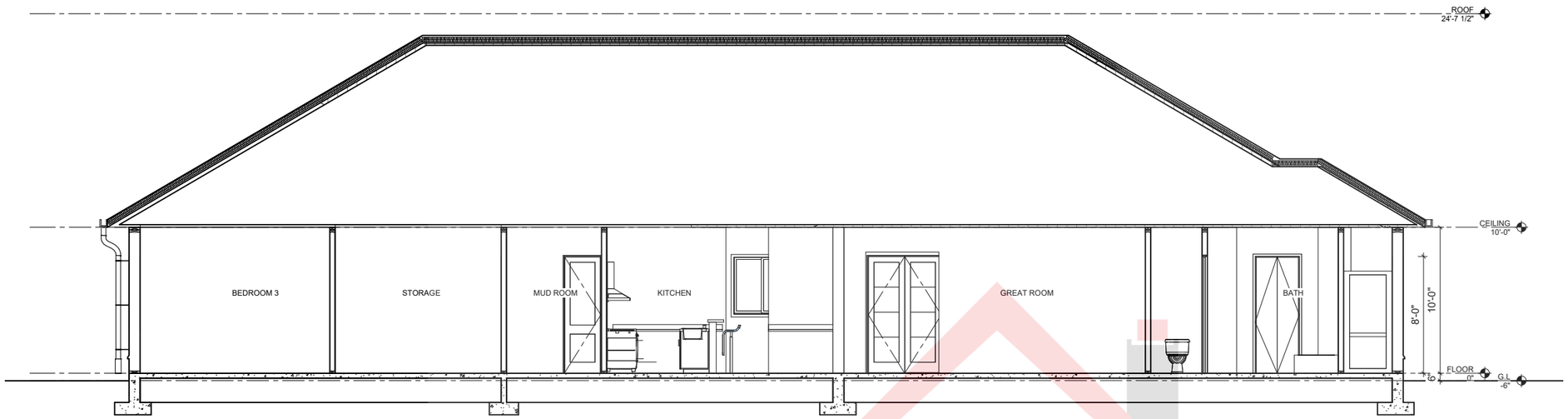

1 Section 1
SCALE 1/4" = 1'-0"

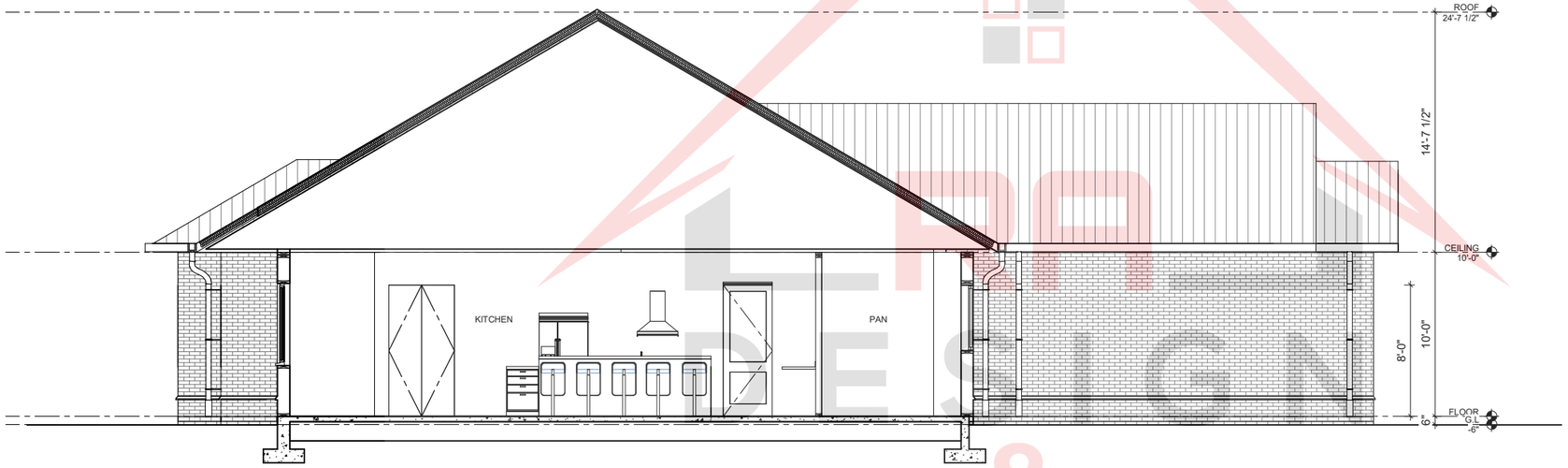

2 Section 2
SCALE 1/4" = 1'-0"

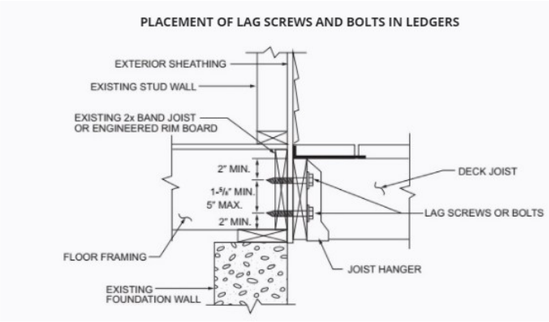

3 DECK JOIST CONNECTION DETAIL
NTS

TABLE R507.7

MAXIMUM JOIST SPACING FOR DECKING

DECKING MATERIAL TYPE AND NOMINAL SIZE	MAXIMUM ON-CENTER JOIST SPACING	
	Decking perpendicular to joist	Decking diagonal to joist[a]
$1^1/_4$-inch-thick wood	16 inches	12 inches
2-inch-thick wood	24 inches	16 inches
Plastic composite	In accordance with Section R507.2	In accordance with Section R507.2

For SI: 1 inch = 25.4 mm, 1 foot = 304.8 mm, 1 degree = 0.01745 rad.

a. Maximum angle of 45 degrees from perpendicular for wood deck boards.

5 DECK JOIST SPACING TABLE
NTS

TABLE R507.2.3

FASTENER AND CONNECTOR SPECIFICATIONS FOR DECKS[a, b]

ITEM	MATERIAL	MINIMUM FINISH/COATING	ALTERNATE FINISH/COATING[e]
Nails and timber rivets	In accordance with ASTM F1667	Hot-dipped galvanized per ASTM A153	Stainless steel, silicon bronze or copper
Bolts[c] Lag screws[d] (including nuts and washers)	In accordance with ASTM A307 (bolts), ASTM A563 (nuts), ASTM F844 (washers)	Hot-dipped galvanized per ASTM A153, Class C (Class D for $^3/_8$-inch diameter and less) or mechanically galvanized per ASTM B695, Class 55 or 410 stainless steel	Stainless steel, silicon bronze or copper
Metal connectors	Per manufacturer's specification	ASTM A653 type G185 zinc coated galvanized steel or post hot-dipped galvanized per ASTM A123 providing a minimum average coating weight of 2.0 oz./ft^2 (total both sides)	Stainless steel

For SI: 1 inch = 25.4 mm, 1 foot = 304.8 mm.

a. Equivalent materials, coatings and finishes shall be permitted.

b. Fasteners and connectors exposed to salt water or located within 300 feet of a salt water shoreline shall be stainless steel.

c. Holes for bolts shall be drilled a minimum $^1/_{32}$ inch and a maximum $^1/_{16}$ inch larger than the bolt.

d. Lag screws $^1/_2$ inch and larger shall be predrilled to avoid wood splitting per the National Design Specification (NDS) for Wood Construction.

e. Stainless-steel-driven fasteners shall be in accordance with ASTM F1667.

6 DECK FASTENER SPECS
NTS

DES & ENGINEERING

16475 CIRCLE DR

PERMIT SET

REV	DATE	REMARKS

SIGN DATE: 06/11/2021

DATE: 06/11/2021

SCALE: AS NOTED

DRAWN BY: AJ

CKD BY:

PROJECT#: 202103130

A-301

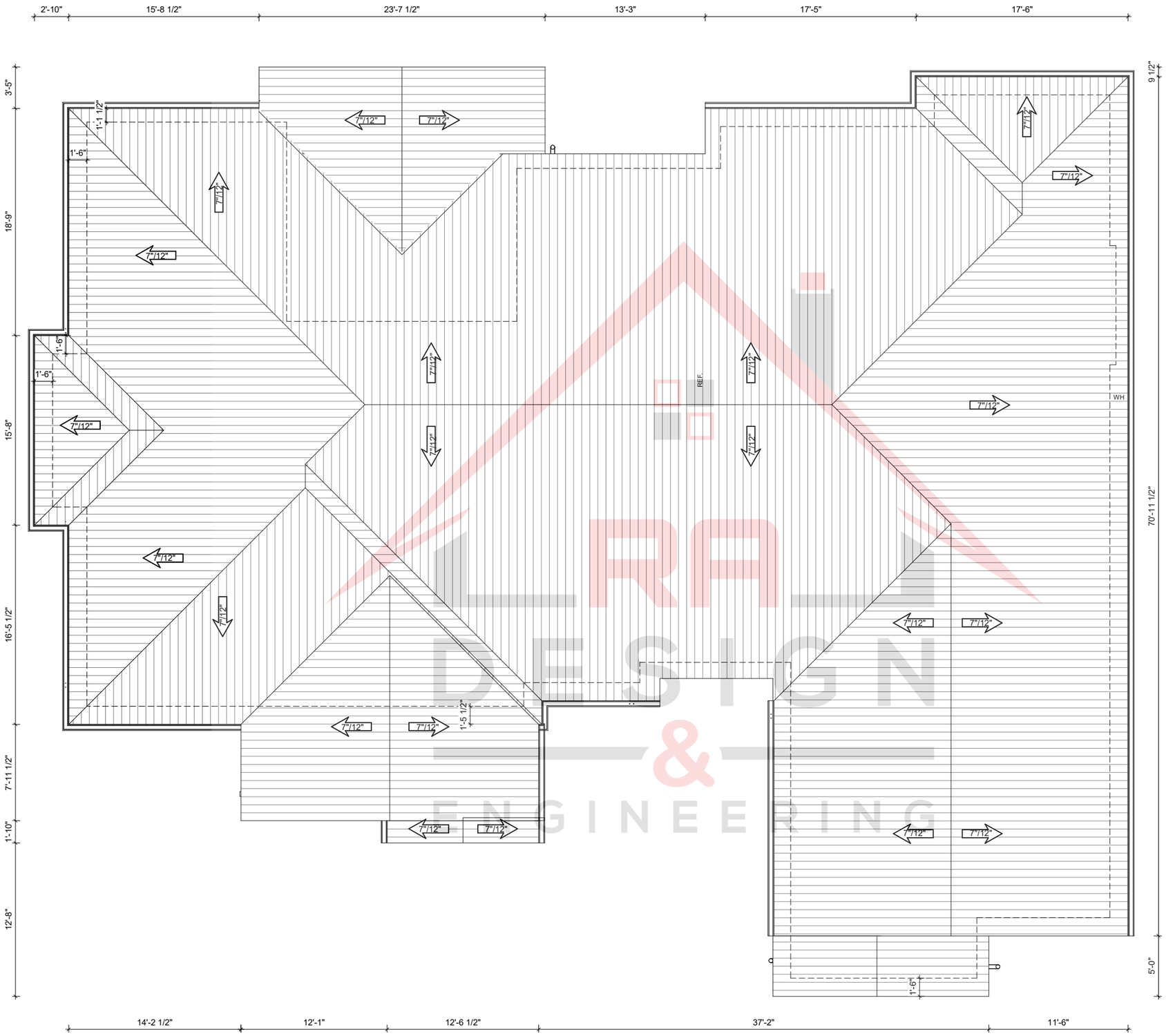

1 ROOF PLAN

SCALE 1/4" = 1'-0"

TERRA DESIGN & ENGINEERING

16475 CIRCLE DR

PERMIT SET

REV	DATE	REMARKS

SIGN DATE:

DATE:

SCALE:

DRAWN BY:

CKD BY:

PROJECT#:

PLAN NOTES

1. THE CONSTRUCTION SHALL NOT RESTRICT A FIVE-FOOT CLEAR AND UNOBSTRUCTED ACCESS TO ANY WATER OR POWER DISTRIBUTION FACILITIES (POWER POLES, PULL-BOXES, TRANSFORMERS, VAULTS, PUMPS, VALVES, METERS, APPURTENANCES, ETC.) OR TO THE LOCATION OF THE HOOK-UP. THE CONSTRUCTION SHALL NOT BE WITHIN TEN FEET OF ANY POWER LINES-WHETHER OR NOT THE LINES ARE LOCATED ON THE PROPERTY. FAILURE TO COMPLY MAY CAUSE CONSTRUCTION DELAYS AND/OR ADDITIONAL EXPENSES.
2. AN APPROVED SEISMIC GAS SHUTOFF VALVE WILL BE INSTALLED ON THE FUEL GAS LINE ON THE DOWNSTREAM SIDE OF THE UTILITY METER AND BE RIGIDLY CONNECTED TO THE EXTERIOR OF THE BUILDING OR STRUCTURE CONTAINING THE FUEL GAS PIPING. (PER
3. PLUMBING FIXTURES ARE REQUIRED TO BE CONNECTED TO A SANITARY SEWER OR TO AN APPROVED SEWAGE DISPOSAL SYSTEM (R306.3).
4. KITCHEN SINKS, LAVATORIES, BATHTUBS, SHOWERS, BIDETS, LAUNDRY TUBS AND WASHING MACHINE OUTLETS SHALL BE PROVIDED WITH HOT AND COLD WATER AND CONNECTED TO AN APPROVED WATER SUPPLY (R306.4).
5. BATHTUB AND SHOWER FLOORS, WALLS ABOVE BATHTUBS WITH A SHOWERHEAD, AND SHOWER COMPARTMENTS SHALL BE FINISHED WITH A NONABSORBENT SURFACE. SUCH WALL SURFACES SHALL EXTEND TO A HEIGHT OF NOT LESS THAN 6 FEET ABOVE THE FLOOR (R307.2).
6. PROVIDE ULTRA-LOW FLUSH WATER CLOSETS FOR ALL NEW CONSTRUCTION. EXISTING SHOWER HEADS AND TOILETS MUST BE ADAPTED FOR LOW WATER CONSUMPTION.
7. WATER HEATER MUST BE STRAPPED TO WALL. (SEC. 507.3, LAPC)
8. AUTOMATIC GARAGE DOOR OPENERS, IF PROVIDED, SHALL BE LISTED IN ACCORDANCE WITH UL 325. (R309.4)
9. SMOKE DETECTORS SHALL BE PROVIDED FOR ALL DWELLING UNITS INTENDED FOR HUMAN OCCUPANCY, UPON THE OWNER'S APPLICATION FOR A PERMIT FOR ALTERATIONS, REPAIRS, OR ADDITIONS, EXCEEDING ONE THOUSAND DOLLARS ($1,000). (R314.6.2)
10. WHERE A PERMIT IS REQUIRED FOR ALTERATIONS, REPAIRS OR ADDITIONS EXCEEDING ONE THOUSAND DOLLARS ($1,000), EXISTING DWELLINGS OR SLEEPING UNITS THAT HAVE ATTACHED GARAGES OR FUEL-BURNING APPLIANCES SHALL BE PROVIDED WITH A CARBON MONOXIDE ALARM IN ACCORDANCE WITH SECTION R315.2. CARBON MONOXIDE ALARMS SHALL ONLY BE REQUIRED IN THE SPECIFIC DWELLING UNIT OR SLEEPING UNIT FOR WHICH THE PERMIT WAS OBTAINED. R315.2.2)
11. EVERY SPACE INTENDED FOR HUMAN OCCUPANCY SHALL BE PROVIDED WITH NATURAL LIGHT BY MEANS OF EXTERIOR GLAZED OPENINGS IN ACCORDANCE WITH SECTION R303.1 OR SHALL BE PROVIDED WITH ARTIFICIAL LIGHT THAT IS ADEQUATE TO PROVIDE AN AVERAGE ILLUMINATION OF 6 FOOT-CANDLES OVER THE AREA OF THE ROOM AT A HEIGHT OF 30 INCHES ABOVE THE FLOOR LEVEL. (R303.1)
12. A COPY OF THE EVALUATION REPORT AND/OR CONDITIONS OF LISTING SHALL BE MADE AVAILABLE AT THE JOB SITE
13. PROVIDE MIN. 24" CLEAR IN FRONT OF THE WATER CLOSET.
14. PROVIDE MIN. 30" CLEAR WIDTH FOR THE WATER CLOSET
15. HANDRAIL 34"-46" ABOVE THE STAIR NOSING PER APPLICABLE CBC
16. 42" HIGH GUARDRAIL, PER APPLICABLE CBC
17. DRYER. VENT HORIZONTAL TO OUTSIDE W/ BACKDRAFT DAMPER.
18. ROOF ABOVE
19. BASEMENT BELOW
20. 5/8" TYPE "X" GYP. BD. IN THE GARAGE AND UNDER STAIRS AT ENCLOSED USABLE SPACE W/ 6d COOLER NAILS @7" O.C.
21. ULTRA-LOW CONSUMPTION WATER CLOSET (1.28 GAL/FLUSH).
22. PROVIDE COPPER WATER LINE FOR ICE MAKER.
23. PROVIDE WATER AND WASTE FOR WASHER (RECESSED BOX AT INTERIOR LOCATIONS)
24. ELECTRICAL SERVICE PANEL.
25. SHOWER DRAIN IN FLOOR BELOW WASHER, CONN. TO 1 1/2" - DIA ABS PIPE W/ 1/4" PER FOOT SLOPED TO EXT.
26. 30" WIDE COOK TOP. BUILT-IN HOOD WITH LIGHT AND VENT TO OUTSIDE AIR.
27. GLAZING IN HAZARDOUS LOCATIONS SHALL BE TEMPERED. (2406.4)
    A. PANELS IN SLIDING OR SWINGING DOORS.
    B. DOORS AND ENCLOSURE FOR HOT TUB, BATHTUB, SHOWERS (ALSO GLAZING IN WALL ENCLOSING THESE COMPARTMENTS WITHIN 5 FT. OF STANDING SURFACE.
    C. GLAZING IN FIXED OR OPERABLE PANELS TO A DOOR WHERE THE NEAREST EXPOSED EDGE OF THE GLAZING IS WITHIN A 24 INCH ARC OF VERTICAL EDGE OF THE DOOR IN A CLOSED POSITION AND WHERE THE BOTTOM EXPOSED EDGE OF THE GLAZING IS LESS THAN 60 INCHES ABOVE THE WALKING SURFACE.
28. EACH WATER CLOSET STOOL SHOULD BE LOCATED IN A CLEAR SPACE NOTE LESS THAN 30" IN WIDTH AND HAVE A MINIMUM CLEAR SPACE IN FRONT OF NOT LESS THAN 24" MAXIMUM 1.6 GALLONS/FLUSH FOR ALL TEH WATER CLOSETS.
29. PROVIDE ONLY VENTLESS ON-DEMAND WATER HEATERS.
30. FIRE BLOCKING MUST BE PROVIDED IN ACCORDANCE WITH SECTION 717 IN THE FOLLOWING LOCATIONS:
    A. IN CONCEALED SPACES OF STUD WALLS AND PARTITIONS, INCLUDING FURRED SPACES, AT THE CEILING AND FLOOR LEVELS..
    B. IN CONCEALED SPACES OF STUD WALLS AND PARTITIONS, INCLUDING FURRED SPACES, AT 10 FOOT INTERVALS ALONG THE LENGTH OF THE WALL
    C. AT ALL INTERCONNECTIONS BETWEEN CONCEALED VERTICAL AND HORIZONTAL SPACES SUCH AS OCCUR AT SOFFITS, DROP CEILINGS AND COVERED CEILINGS.
    D. IN CONCEALED SPACES BETWEEN STAIR STRINGERS AT THE TOP AND BOTTOM OF THE RUN AND BETWEEN STUDS ALONG AND IN LINE WITH THE RUN OF STAIRS IF THE WALL UNDER THE STAIRS IS UNFINISHED.
    E. AND SIMILAR OPENINGS WHICH AFFORD A PASSAGE FOR FIRE AT CEILING AND FLOOR LEVELS, WITH NONCOMBUSTIBLE MATERIALS. SUCH CLEARANCE SHALL BE MEASURED VERTICALLY FROM A PLANE PARALLEL AND TANGENT TO THE STAIRWAY TREAD NOSING TO THE SOFFIT ABOVE ALL POINTS.
31. PROVIDE 6" INCH CLEARANCES ON THE SIDES, BACK, FRONT AND CEILING OF THE FURNACE.
32. THE CONSTRUCTION SHALL NOT RESTRICT A FIVE-FOOT CLEAR AND UNOBSTRUCTED ACCESS TO ANY WATER OR POWER DISTRIBUTION FACILITIES (POWER POLES, PULL-BOXES, TRANSFORMERS, VAULTS, PUMPS, VALVES, METERS, APPURTENANCES, ETC.) OR TO THE LOCATION OF THE HOOK-UP. THE CONSTRUCTION SHALL NOT BE WITHIN TEN FEET OF ANY POWER LINES-WHETHER OR NOT THE LINES ARE LOCATED ON THE PROPERTY. FAILURE TO COMPLY MAY CAUSE CONSTRUCTION DELAYS AND /OR ADDITIONAL EXPENSES.
33. PROVIDE ULTRA-LOW FLUSH WATER CLOSETS FOR ALL NEW CONSTRUCTIONS. EXISTING SHOWER HEADS AND TOILETS MUST BE ADAPTED FOR LOW WATER CONSUMPTION.
34. PROVIDE 70" HIGH NON-ABSORBENT WALL ADJACENT TO SHOWER AND APPROVED SHATTER-RESISTANT MATERIALS FOR SHOWER ENCLOSURE.
35. WATER HEATER MUST BE STRAPPED TO WALL.
36. UNDER FLOOR VENTILATION OPENINGS IN THE UNDER FLOOR AREA SHALL COMPLY WITH THE FOLLOWING REQUIREMENTS:
    A. THE TOP OF THE OPENING SHALL BE LOCATED NOT MORE THAN 12 INCHES BELOW THE BOTTOM OF THE FLOOR JOIST.
    B. THE OPENINGS SHALL BE DISTRIBUTED APPROXIMATELY EQUALLY AND LOCATED TO PROVIDE CROSS VENTILATION, FOR EXAMPLE, BE LOCATING THE OPENING ALONG THE LENGTH OF AT LEAST TWO OPPOSITE SIDES OF THE BUILDING.
    C. THE OPENINGS SHALL BE THE LARGER OF: 1.5 SQUARE FEET FOR EACH 25 LINEAR FEET OR FRACTION OF EXTERIOR WALL, OR OPENINGS SHALL BE EQUAL TO 1% OF UNDER FLOOR AREA. THE OPENINGS MAY BE COVERED WITH CORROSION RESISTANT WIRE MESH WITH MESH
37. PLUMBING FIXTURES ARE REQUIRED TO BE CONNECTED TO A SANITARY SEWER OR TO AN APPROVED SEWAGE DISPOSAL SYSTEM.
38. KITCHEN SINKS, LAVATORIES, BATHTUBS, SHOWERS, BIDETS, LAUNDRY TUBS AND WASHING MACHINE OUTLETS SHALL BE PROVIDED WITH HOT AND COLD WATER AND CONNECTED TO AN APPROVED WATER SUPPLY.
39. THE FLOW RATES FOR ALL PLUMBING FIXTURES SHALL COMPLY WITH THE MAXIMUM FLOW RATES SPECIFIED IN SECTION 4.303.1.
40. MULTI-FAMILY DWELLINGS NOT EXCEEDING THREE STORIES AND CONTAINING 50 UNITS OR LESS SHALL INSTALL A SEPARATE METER OR SUBMETER WITHIN COMMON AREAS AND WITHIN EACH INDIVIDUAL DWELLING UNIT.
41. FOR PROJECTS THAT INCLUDE LANDSCAPE WORK, THE LANDSCAPE CERTIFICATION, FORM GRN 12, SHALL BE COMPLETED PRIOR TO FINAL INSPECTION APPROVAL.
42. LOCKS SHALL BE INSTALLED ON ALL PUBLICLY ACCESSIBLE EXTERIOR FAUCETS AND HOSE BIBS. (4.304.4)
43. WATER USED IN THE BUILDING FOR WATER CLOSETS, URINALS, LAUNDRY DRAINS, AND PROCESS COOLING AND HEATING SHALL COME FROM CITY-RECYCLE WATER IF AVAILABLE FOR USE WITHIN 200 FEET OF THE PROPERTY LINE. (4.305.2)
44. BUILDING NOT EXCEEDING 25 STORIES SHALL HAVE COOLING TOWERS WITH MINIMUM OF 6 CYCLES OF CONCENTRATION (BLOWDOWN) OR HAVE A MINIMUM OF 50% OF MAKEUP WATER SUPPLY TO COOLING TOWERS COME FROM NON-POTABLE WATER SOURCES. (4.305.3.1)
45. BUILDING EXCEEDING 25 STORIES SHALL HAVE COOLING TOWERS WITH MINIMUM OF 6 CYCLES OF CONCENTRATION (BLOWDOWN) AND HAVE A MINIMUM OF 100% OF MAKEUP WATER SUPPLY TO COOLING TOWERS COME FROM NON-POTABLE WATER SOURCES. (4.305.3.2)
46. WHERE GROUNDWATER IS BEING EXTRACTED AND DISCHARGED, A SYSTEM FOR ONSITE REUSE OF THE GROUNDWATER SHALL BE DEVELOPED AND CONSTRUCTED IF THE GROUNDWATER WILL NOT BE DISCHARGED TO THE SEWER. (4.305.4)
47. THE HOT WATER SYSTEM SHALL NOT ALLOW MORE THAN 0.6 GALLONS OF WATER TO BE DELIVERED TO ANY FIXTURE BEFORE HOT WATER ARRIVES
48. MATERIALS DELIVERED TO THE CONSTRUCTION SHALL BE PROTECTED FROM RAIN OR OTHER SOURCES OF MOISTURE.
49. ALL DUCT AND OTHER RELATED AIR DISTRIBUTION COMPONENT OPENINGS SHALL BE COVERED WITH TAPE, PLASTIC, OR SHEET METAL UNTIL THE FINAL STARTUP OF THE HEATING, COOLING AND VENTILATING EQUIPMENT.
50. ARCHITECTURAL PAINTS AND COATINGS, ADHESIVES, CAULKS AND SEALANTS SHALL COMPLY WITH THE VOLATILE ORGANIC COMPOUND (VOC) LIMITS LISTED IN TABLES 4.504.1-4.504.3.
51. THE VOC CONTENT VERIFICATION CHECKLIST, FORM GRN 2, SHALL BE COMPLETED AND VERIFIED PRIOR TO FINAL INSPECTION APPROVAL. THE MANUFACTURER'S SPECIFICATIONS SHOWING VOC CONTENT FOR ALL APPLICABLE PRODUCTS SHALL BE READILY AVAILABLE AT THE JOB SITE AND BE PROVIDED TO THE FIELD INSPECTOR FOR VERIFICATION. (4.504.2.4)
52. ALL NEW CARPET INSTALLED IN THE BUILDING INTERIOR SHALL MEET THE TESTING AND PRODUCT REQUIREMENTS OF ONE OF THE FOLLOWING:
    A. CARPET AND RUG INSTITUTE'S GREEN LABEL PLUS PROGRAM
    B. CALIFORNIA DEPARTMENT OF PUBLIC HEALTH'S SPECIFICATION 01350
    C. NSF/ANSI 140 AT THE GOLD LEVEL
    D. SCIENTIFIC CERTIFICATIONS SYSTEMS INDOOR ADVANTAGE™ GOLD (4.504.3)
    E. ALL NEW CARPET CUSHION INSTALLED IN THE BUILDING INTERIOR SHALL MEET THE REQUIREMENTS OF THE CARPET AND RUG INSTITUTE GREEN LABEL PROGRAM. (4.504.3.1)
53. NEW HARDWOOD PLYWOOD, PARTICLE BOARD, AND MEDIUM DENSITY FIBERBOARD COMPOSITE WOOD PRODUCTS USED IN THE INTERIOR OR EXTERIOR OF THE BUILDING SHALL MEET THE FORMALDEHYDE LIMITS LISTED IN TABLE 4.504.5. (4.504.5)
54. THE FORMALDEHYDE EMISSIONS VERIFICATION CHECKLIST, FORM GRN 3, SHALL BE COMPLETED PRIOR TO FINAL INSPECTION APPROVAL. THE MANUFACTURER'S SPECIFICATIONS SHOWING FORMALDEHYDE CONTENT FOR ALL APPLICABLE WOOD PRODUCTS SHALL BE READILY AVAILABLE AT THE JOB SITE AND BE PROVIDED TO THE FIELD INSPECTOR FOR VERIFICATION.
55. AN APPROVED SMOKE ALARM SHALL BE INSTALLED IN EACH SLEEPING ROOM & HALLWAY R AREA GIVING ACCESS TO A SLEEPING ROOM, AND ON EACH STORY AND BASEMENT FOR DWELLING WITH MORE THAN ONE STORY . SMOKE ALARMS SHALL BE INTERCONNECTED SO THAT ACTUATION OF ONE ALARM WILL ACTIVATE SO THAT ACTUATION OF ONE ALARM WILL ACTIVATE ALL THE ALARMS WITHIN THE INDIVIDUAL DWELLING UNIT. IN NEW CONSTRUCTION SMOKE ALARMS SHALL RECEIVE THEIR PRIMARY POWER SOURCE FROM THE BUILDING WIRING AND SHALL BE EQUIPPED WITH BATTERY BACK UP AND LOW BATTERY SIGNAL.
56. AN APPROVED CARBON MONOXIDE ALARM SHALL BE INSTALLED IN DWELLING UNITS AND IN SLEEPING UNITS WITHIN WHICH FUEL-BURNING APPLIANCES ARE INSTALLED AND IN DWELLING UNITS THAT HAVE ATTACHED GARAGES. CARBON MONOXIDE ALARM SHALL BE PROVIDED OUTSIDE OF EACH SEPARATED DWELLING UNIT SLEEPING AREA IN THE IMMEDIATE VICINITY OF THE BEDROOM(S) AND ON EVERY LEVEL OF A DWELLING UNIT INCLUDING BASEMENTS. (R315)
57. MAXIMUM DRIVE WAY SLOPE SHALL NOT EXCEED 20%. GRADE DETAILS AND TRANSITION SLOPE REQUIRED WHERE SLOPE EXCEEDS 12 1/2% . MAXIMUM DRIVEWAY CROSS SLOPE IS 10% . MAXIMUM SLOPE WITHIN PARKING AREA IS 5%. 12.21A5(G), INFORMATION BULLETIN # P/ZC 2002-001.
58. AUTOMOBILES ARE NOT PERMITTED TO BACK ONTO A MAJOR OR SECONDARYHIGHWAY OR SIDEWALK. 12.21A5(I)1.
59. MAXIMUM DRIVE WAY SLOPE SHALL NOT EXCEED 20%. GRADE DETAILS AND TRANSITION SLOPE REQUIRED WHERE SLOPE EXCEEDS 12 1/2% . MAXIMUM DRIVEWAY CROSS SLOPE IS 10% . MAXIMUM SLOPE WITHIN PARKING AREA IS 5%. 12.21A5(G), INFORMATION BULLETIN # P/ZC 2002-001.
60. PROVIDE EMERGENCY EGRESS FROM SLEEPING ROOMS.

PLAN NOTES

1. FOR FUTURE INSTALLATION OF ELECTRIC VEHICLE SUPPLY EQUIPMENT (EVSE) IN EACH ONE AND TWO FAMILY DWELLINGS AND TOWN HOUSES:
    a. SHOW ON PLANS THAT A MINIMUM 1" LISTED RACEWAY IS INSTALLED FOR EACH UNIT TO ACCOMMODATE A DEDICATE 208 / 240 VOLT BRANCH CIRCUIT.THE RACEWAY SHALL ORIGINATE AT THE MAIN SERVICE OR A SUBPANEL AND TERMINATE IN CLOSE PROXIMITY TO THE PROPOSED LOCATION OF THE CHARGING SYSTEM INTO A LISTED CABINETBOX OR ENCLOSURE.
    b. THE PANEL OR SUBPANEL SHALL PROVIDE CAPACITY TO INSTALL A 40-AMPERE MINIMUM DEDICATED BRANCH CIRCUIT AND SPACE(S) RESERVED TO PERMIT INSTALLATION OF A BRANCH CIRCUIT OVER CURRENT PROTECTIVE DEVICE.
    c. THE SERVICE PANEL OR SUBPANEL CIRCUIT DIRECTORY SHALL IDENTIFY THE OVER CURRENT PROTECTIVE DEVICE SPACE(S) RESERVED FOR FUTURE EV CHARGING AS EV CAPABLE. THE ACEWAY TERMINATION LOCATION SHALL BE PERMANENT AND VISIBLY MARKED EV CAPABLE.
2. A COPY OF CONSTRUCTION DOCUMENTS OR A COMPARABLE DOCUMENT INDICATING THE INFORMATION FROM ENERGY CODE SECTIONS 110.10(B) THROUGH 110.10(C)JSHALL BE PROVIDED TO THE OCCUPANT.
3. FANS SHALL BE ENERGY STAR COMPLIANT AND BE DUCTED TO TERMINATE TO THE OUTSIDE OF THE BUILDING.
4. HEATER SHALL BE CAPABLE OF MAINTAINING MINIMUM ROOM TEMPERATURE OF 68 FAT A POINT 3 FEET ABOVE THE FLOOR AND 2 FEET FROM EXTERIOR WALLS IN ALL HABITABLE ROOMS AT THE DESIGN TEMPERATURE.
5. FANS, NOT FUNCTIONING A COMPONENT OF A WHOLE HOUSE VENTILATION SYSTEM, MUST B CONTROLLED BY A HUMIDITY CONTROL
6. THE MAIN ELECTRICAL SERVICE PANEL SHALL HAVE A RESERVED SPACE TO ALLOW FOR INSTALLATION OF A DOUBLE POLE CIRCUIT BREAKER FOR FUTURE SOLAR ELECTRIC INSTALLATION . THE RESERVED SPACE SHALL BE POSITIONED AT THE OPPOSITE (LOAD) END FROM THE INPUT FEEDER LOCATION OR MAIN CIRCUIT LOCATION AND SHALL BE PERMANENTLY MARKED AS 'FOR FUTURE SOLAR ELECTRIC' .
7. ALL THERMOSTATS COMPLY WITH REFERENCE JOINT APPENDIX JA5 AND ARE CAPABLE OF RECEIVING AND RESPONDING TO DEMAND RESPONSE SIGNALS PRIOR TO GRANTING OF AN OCCUPANCY PERMIT BY THE ENFORCING AGENCY.
8. COMPLY WITH ONE OF THE FOLLOWING MEASURES;
    a. INSTALL A DISHWASHER THAT MEETS OR EXCEEDS THE ENERGY STAR PROGRAM REQUIREMENTS WITH EITHER A REFRIGERATOR THAT MEETS OR EXCEEDS THE ENERGY STAR PROGRAM REQUIRMENTS OR A WHOLE HOUSE FAN DRIVEN BY AN ELECTRONICALLY COMMUTATED MOTOR; OR
    b. INSTALL A HOME AUTOMATION SYSTEM CAPABLE OF, AT A MINIMUM, CONTROLLING THE APPLIANCES AND LIGHTING OF THE DWELLING AND RESPONDING TO DEMAND RESPONSE SIGNALS; OR
    c. INSTALL ALTERNATIVE PLUMBING PIPING TO PERMIT THE DISCHARGE FROM THE CLOTHES WASHER AND ALL SHOWERS, BATHTHUBS TO BE USED FOR AN IRRIGATION SYSTEM IN COMPLIANCE WITH THE CALIFORNIA PLUMBING CODE AND ANY APPLICABLE LOCAL ORDINANCES; OR
    d. INSTALL A RAINWATER CATCHMENT SYSTEM DESIGNED TO COMPLY WITH THE CALIFORNIA PLUMBING CODE AND ANY APPLICABLE LOCAL ORDINANCES, AND THAT USES RAINWATER FLOWING FORM AT LEAST 65 PERCENT OF THE AVAILABLE ROOF AREA.
    e. NO EAVES PERMITTED WHEN LESS THAN 2' FROM PROPERTY LINE.
9. WALL SWITCHES SHALL BE AT 48", RECEPTACLES SHALL BE AT 12" (WALL) AND 42" (COUNTER) UNLESS OTHERWISE NOTED.
10. BATHROOM LIGHTING SHALL BE HIGH EFFICACY LUMINARIES (40 LUMENS PER WATT) OR CONTROLLED BY VACANCY (OCCUPANCY) SENSOR CERTIFIED TO COMPLY WITH SEC 119(D) CEES. THIS IS A MANUAL ON, AUTO OFF DEVICE. AUTOMATIC ON OR DEVICES WITH AN OVERRIDE SWITCH POSITION ARE NOT APPROVED. AT LEAST ONE HIGH EFFICACY LIGHTING SHALL BE INSTALLED IN EACH BATHROOM. CENC SECTION 150.0(K)5A
11. LED LIGHTING ASSEMBLIES SHALL BE LISTED AND CEC APPROVED. LED LIGHT COMPONENTS ARE NOT ALLOWED TO BE USED WITH HALO OR OTHER HOUSING/CANS.
12. ALL NEW HALLWAY AND BATHROOM LIGHTS TO BE INSTALLED SHALL BE HIGH EFFICIENCY.
13. HIGH EFFICACY MUST BE SWITCHED SEPARATELY FROM LOW EFFICACY LIGHTING.
14. RECESSED LUMINARIES IN INSULATED CEILINGS SHALL BE RATED FOR ZERO CLEARANCE INSULATION COVER (IC), AND SHALL INCLUDE A LABEL CERTIFYING AIR TIGHT (AT) DESIGNATION.
15. OUTDOOR LIGHTING SHALL BE HIGH-EFFICACY OR CONTROLLED BY A MOTION SENSOR AND PHOTO-CONTROL CERTIFIED.
16. NO LIGHTING SHALL BE ON THE REQUIRED 20 AMP SMALL APPLIANCE BRANCH CIRCUITS.
17. ALL RECEPTACLES AND SWITCHES TO BE GROUNDED AND OR THE GROUNDING TYPE.
18. PROVIDE OUTLETS ALONG THE WALLS IN NEW ROOMS NOT TO EXCEED 12 FEET APART HORIZONTALLY.
19. PROVIDE AT LEAST ONE RECEPTACLE OUTLET ACCESSIBLE AT GRADE LEVEL AND NOT MORE THAN SIX FEET SIX INCHES ABOVE GRADE SHALL BE INSTALLED AT THE FRONT AND BACK OF THE HOUSE. THE ENCLOSURE FOR SUCH RECEPTACLES SHALL BE WEATHERPROOF WHETHER OR NOT THE ATTACHMENT PLUG CAP IS INSERTED (TYPICALLY REFERRED TO AS A BUBBLE COVER).
20. ALL REQUIRED 15/20 AMPERE RECEPTACLES LISTED IN SECTION 210.52 FOR DWELLING UNITS SHALL BE LISTED TAMPER-RESISTANT RECEPTACLES.
21. EVERY KITCHEN, FAMILY ROOM, DINING ROOM, LIVING ROOM, PARLOR, LIBRARY, DEN, SUNROOM, BEDROOM, RECREATION ROOM, BATHROOM, GARAGE, BASEMENT, LAUNDRY AND OUTDOOR AREA, ALL 125-VOLT, 15- AND 20-AMPERE RECEPTACLES SHALL BE LISTED TAMPER-RESISTANT RECEPTACLES PER CEC 406.11, CEC 210.52.
22. AT LEAST ONE 20 AMP CIRCUIT IS REQUIRED FOR BATHROOMS. SUCH CIRCUITS SHALL HAVE NO OTHER OUTLETS. THIS CIRCUIT MAY SERVE MORE THAN ONE BATHROOM. ALL 120-VOLTS, SINGLE PHASE, 15-AND 20-AMPERE BRANCH CIRCUITS SUPPLYING OUTLETS INSTALLED IN DWELLING UNIT FAMILY ROOMS,DINING ROOMS, LIVING ROOMS, PARLORS, LIBRARIES, DENS, BEDROOMS, SUNROOMS, RECREATION ROOMS, CLOSETS, HALLWAYS, OR SIMILAR ROOMS OR AREAS SHALL BE PROVIDED BY A LISTED ARC-FAULT CIRCUIT INTERRUPTER, COMBINATION-TYPE, INSTALLED TO PROVIDE PROTECTION OF THE BRANCH CIRCUIT. PROVIDE GFCI PROTECTED ELECTRICAL OUTLET WITHIN 36" OF THE OUTSIDE EDGE OF EACH BATHROOM SINK BASIN. OUTLET SHALL BE LOCATED ON A WALL OR PARTITION THAT IS ADJACENT TO THE BASIN OR INSTALLED ON THE SIDE OR FACE OF THE BASIN CABINET NOT MORE THAN 12" BELOW THE COUNTERTOP.
23. BOND ALL METAL GAS AND WATER PIPES TO GROUND. ALL GROUND CLAMPS MUST BE ACCESSIBLE AND OF AN APPROVED TYPE.
24. NAIL PLATE PROTECTION IS REQUIRED WHEN WIRING IS CLOSER THAN 1 1/4" TO THE EDGE OF THE STUD.
25. ALL SWITCHES, OUTLETS AND JUNCTION BOXES SHALL BE FLUSH WITH THE FINISHED SURFACE. INSTALL GOOF RINGS AS REQUIRED.
26. DUAL SENSOR PHOTOELECTRIC/IONIZATION SMOKE ALARMS ARE REQUIRED IN ALL AREAS/ROOMS USED FOR SLEEPING, IN THE IMMEDIATE VICINITY OUTSIDE THESE AREAS/ROOMS AND AT BOTH THE TOP AND BOTTOM LANDING OF THE INTERIOR STAIRCASE. SMOKE ALARMS INSTALLED WITHIN 20 FT. OF A KITCHEN, BATHROOM, OR ROOM CONTAINING A FIREPLACE OR WOOD BURNING STOVE SHALL BE OF THE PHOTOELECTRIC TYPE.
27. DUAL SENSOR PHOTOELECTRIC/IONIZATION SMOKE ALARMS SHALL BE INSTALLED ON CEILING OR WALL AT EACH FLOOR LEVEL, IN EACH SLEEPING ROOM AND OUTSIDE EACH SLEEPING AREA IN THE IMMEDIATE VICINITY OF THE BEDROOMS.
28. SMOKE ALARMS SHALL BE TESTED AND MAINTAINED IN ACCORDANCE WITH THE MANUFACTURER'S INSTRUCTIONS. SMOKE ALARMS THAT NO LONGER FUNCTION SHALL BE REPLACED. SMOKE ALARMS INSTALLED IN ONE-AND TWO-FAM-ILY DWELLINGS SHALL BE REPLACED AFTER 10 YEARS FROM THE DATE OF MANUFACTURE MARKED ON THE UNIT, OR IF THE DATE OF MANU-FACTURE CANNOT BE DETERMINED.
29. AN APPROVED CARBON MONOXIDE ALARM SHALL BE INSTALLED IN DWELLING UNITS AND IN SLEEPING UNITS WITHIN WHICH FUEL-BURNING APPLIANCES ARE INSTALLED AND IN DWELLING UNITS THAT HAVE ATTACHED GARAGES.
30. POWER SUPPLY FOR SMOKE ALARMS/DETECTORS AND CARBON MONOXIDE ALARMS SHALL BE HARDWIRED AND AC-DC INTERCONNECTED.
31. ALL LIGHT FIXTURES TO BE HIGH EFFICACY LED
32. ALL EXTERIOR LIGHT FIXTURES TO BE EQUIPPED WITH A MOTION SENSOR & PHOTO SENSORS.
33. ALL SWITCHING SHALL HAVE VACANCY SENSORS
34. ALL RECEPTACLE OUTLETS MUST BE INSTALLED IN EVERY KITCHEN, FAMILY ROOM, DINING ROOM, LIVING ROOM, SUNROOM, PARLOR, LIBRARY, DEN, BEDROOM,RECREATION ROOM, AND SIMILAR ROOM OR AREA SO THAT NO POINT ALONG THE WALL SPACE IS MORE THAN 6 FEET, MEASURED HORIZONTALLY ALONG THE FLOOR LINE. FROM A RECEPTACLE OUTLET. PER 2019 CBC 210.52ALL FIXTURES AND SWITCHING TO COMPLY WITH REQUIRED BUILDING ENERGY EFFICIENCY STANDARDS, PER TITLE 24, PART 6.
35. RECEPTACLE HEIGHTS. ELECTRICAL RECEPTACLE OUTLETS ON BRANCH CIRCUITS OF 30 AMPERES OR LESS AND COMMUNICATION SYSTEM RECEPTACLES SHALL BE LOCATED NO MORE THAN 48 INCHES (1219 MM) MEASURED FROM THE TOP OF THE RECEPTACLE OUTLET BOX NOR LESS THAN 15 INCHES (381 MM) MEASURED FROM THE BOTTOM OF THE RECEPTACLE OUTLET BOX TO THE LEVEL OF THE FINISHED FLOOR OR WORKING PLATFORM. IF THE REACH IS OVER A PHYSICAL BARRIER ORAN OBSTRUCTION (FOR EXAMPLE, A KITCHEN BASE CABINET), RECEPTACLES SHALL BE LOCATED WITHIN THE REACH RANGES SPECIFIED IN SEC-TION 1138A.3. PHYSICAL BARRIERS AND OBSTRUCTIONS SHALL NOT EXTEND MORE THAN 25 INCHES (635 MM) FROM THE WALL BENEATH THE RECEPTACLE. PER 1136A.1 2019 CBC

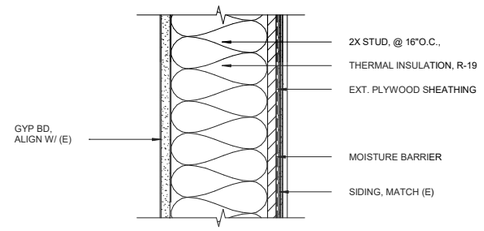

2 EXTERIOR INFILL WALL TYPE
SCALE 3" = 1'-0"

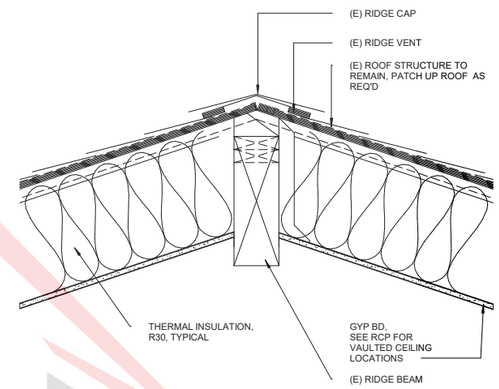

3 ROOF-CEILING DETAIL
SCALE 1 1/2" = 1'-0"

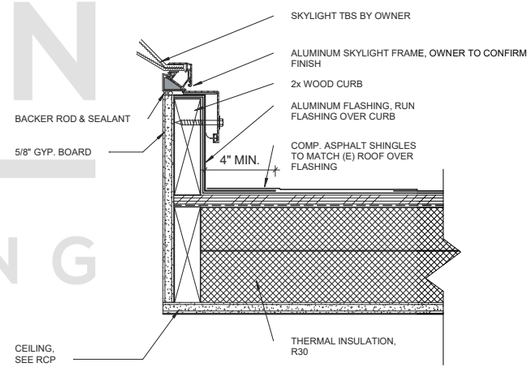

REFER TO STRUCTURAL FOR OPENING REQUIREMENTS

4 SKYLIGHT CURB DETAIL
SCALE 3" = 1'-0"

16475 CIRCLE DR
PERMIT SET

REV	DATE	REMARKS

SIGN DATE: 06/11/2021
DATE: 06/11/2021
SCALE: AS NOTED
DRAWN BY: AJ
CKD BY:
PROJECT#: 202103130

A-501

Window Schedule			
Type Mark	Width	Height	Comments
W5	2'-6"	5'-0"	
W5	2'-6"	5'-0"	
W5	2'-6"	5'-0"	
W2	5'-0"	5'-0"	
W6	4'-0"	4'-0"	
W7	4'-6"	4'-6"	
W3	6'-0"	5'-0"	
W2	5'-0"	5'-0"	
W4	3'-0"	5'-0"	
W4	3'-0"	5'-0"	
W4	3'-0"	5'-0"	
W4	3'-0"	5'-0"	
W4	3'-0"	5'-0"	
W1	9'-0"	5'-0"	
W1	9'-0"	5'-0"	
W3	6'-0"	5'-0"	
W4	3'-0"	5'-0"	
W4	3'-0"	5'-0"	
W9	2'-0"	5'-0"	
W9	2'-0"	5'-0"	

Door Schedule			
Type Mark	Width	Height	Comments
D6	5'-0"	8'-0"	
D5	18'-0"	8'-0"	
D5	9'-0"	8'-0"	
D4	2'-6"	8'-0"	
D4	2'-6"	8'-0"	
D4	2'-6"	8'-0"	
D4	2'-6"	8'-0"	
D4	2'-6"	8'-0"	
D3	3'-0"	8'-0"	
D3	3'-0"	8'-0"	
D3	3'-0"	8'-0"	
D3	3'-0"	8'-0"	
D4	2'-6"	8'-0"	
D10	5'-0"	8'-0"	
D11	4'-0"	8'-0"	
D15	2'-6"	8'-0"	
D15	2'-6"	8'-0"	
D19			
295	3'-0"	8'-0"	
D4	2'-6"	8'-0"	
D15	2'-6"	8'-0"	
339	9'-0"	8'-0"	
D15	2'-6"	8'-0"	
D4	2'-6"	8'-0"	

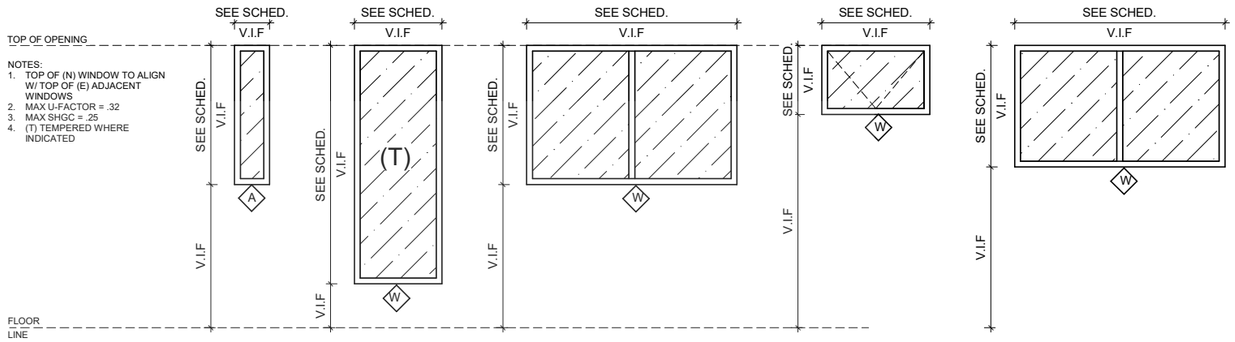

1 WINDOWS TYPE LEGEND
SCALE 1/2" = 1'-0"

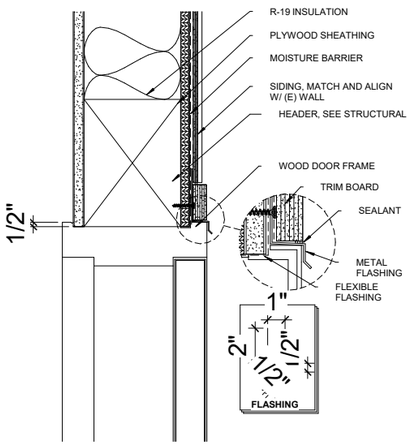

2 EXTERIOR DOOR HEAD DETAIL
SCALE 3" = 1'-0"

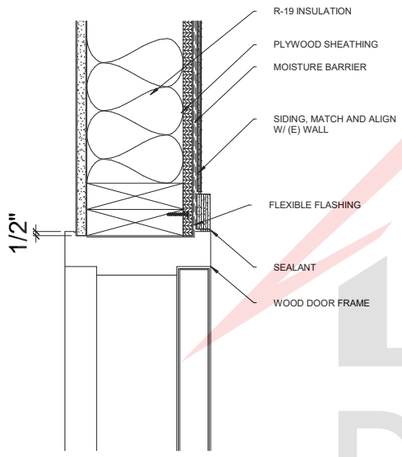

3 EXTERIOR DOOR JAMB DETAIL
SCALE 3" = 1'-0"

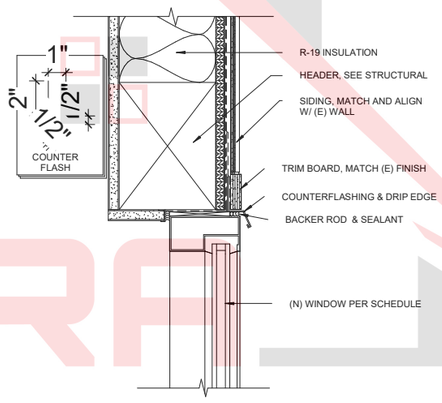

4 EXTERIOR WINDOW HEAD/JAMB DETAIL (N) OPENING
SCALE 3" = 1'-0"

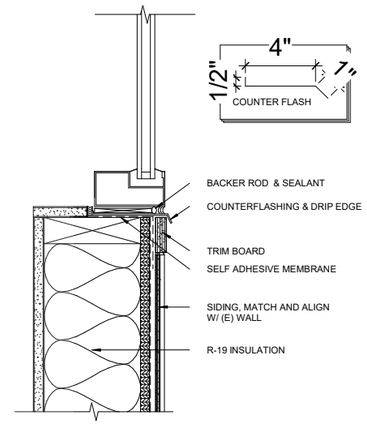

5 EXTERIOR WINDOW SILL DETAIL (N) OPENING
SCALE 3" = 1'-0"

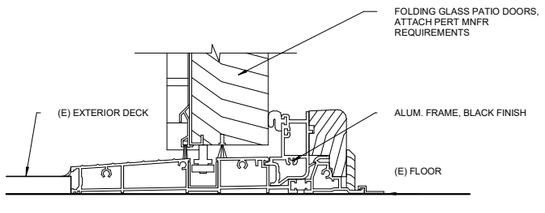

6 EXTERIOR FOLDING DOOR SILL
SCALE 6" = 1'-0"

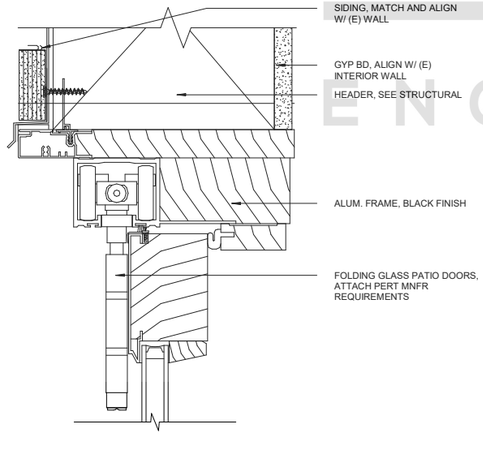

7 EXTERIOR FOLDING DOOR HEAD
SCALE 6" = 1'-0"

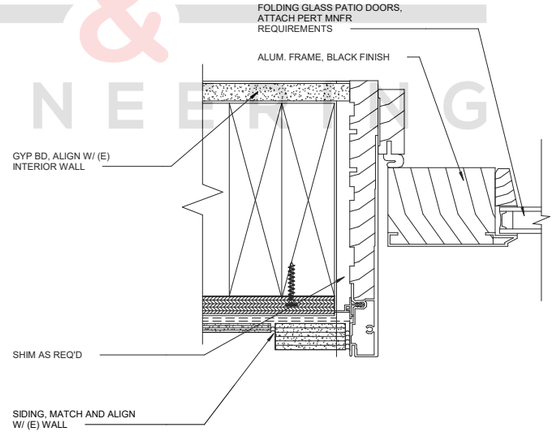

8 EXTERIOR FOLDING DOOR JAMB
SCALE 6" = 1'-0"

RH DESIGN & ENGINEERING

16475 CIRCLE DR
PERMIT SET

REV	DATE	REMARKS

SIGN DATE: 06/11/2021
DATE: 06/11/2021
SCALE: AS NOTED
DRAWN BY: AJ
CKD BY:
PROJECT#: 202103130

A-502

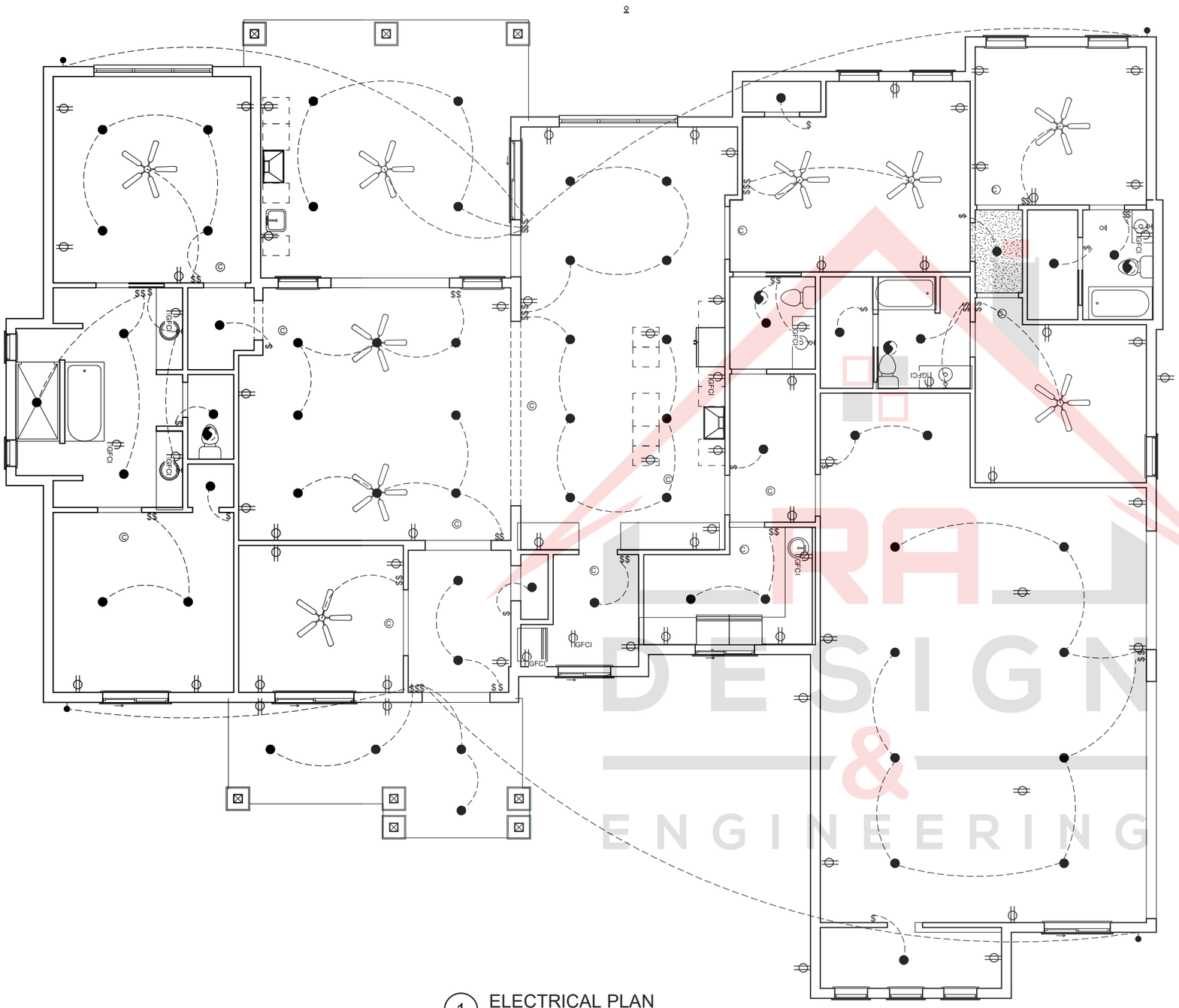

1 ELECTRICAL PLAN
SCALE 1/4" = 1'-0"

CEILING LEGEND

- NEW GYP BD CEILING
- (E) FAN 50 CFM EXHAUSTED DIRECTLY TO THE OUTSIDE
- LIGHTING, TBS BY OWNER
- OUTLET
- GFCI
- QUAD OUTLET
- SWITCH (X) MULTIWAY
- SMOKE & CARBON MONOXIDE ALARM
- SWITCHING
- (E) LIGHTING
- FLOOD LIGHT
- VANITY LIGHT
- CEILING FAN

NOTE: ALL CEILINGS SHALL 8'-0" MATCHING (E) CEILING HEIGHT V.I.F, UON.

SHEET KEYNOTES

16475 CIRCLE DR

PERMIT SET

REV	DATE	REMARKS

SIGN DATE: 06/11/2021

DATE: 06/11/2021

SCALE: AS NOTED

DRAWN BY: AJ

CKD BY:

PROJECT#: 202103130

A-102

PLUMBING LEGEND:

1/2" COLD WATER	
1/2" HOT WATER	
4" WASTE LINE	
TANKLESS WATER HEATER	W.H
HOSE BIB	

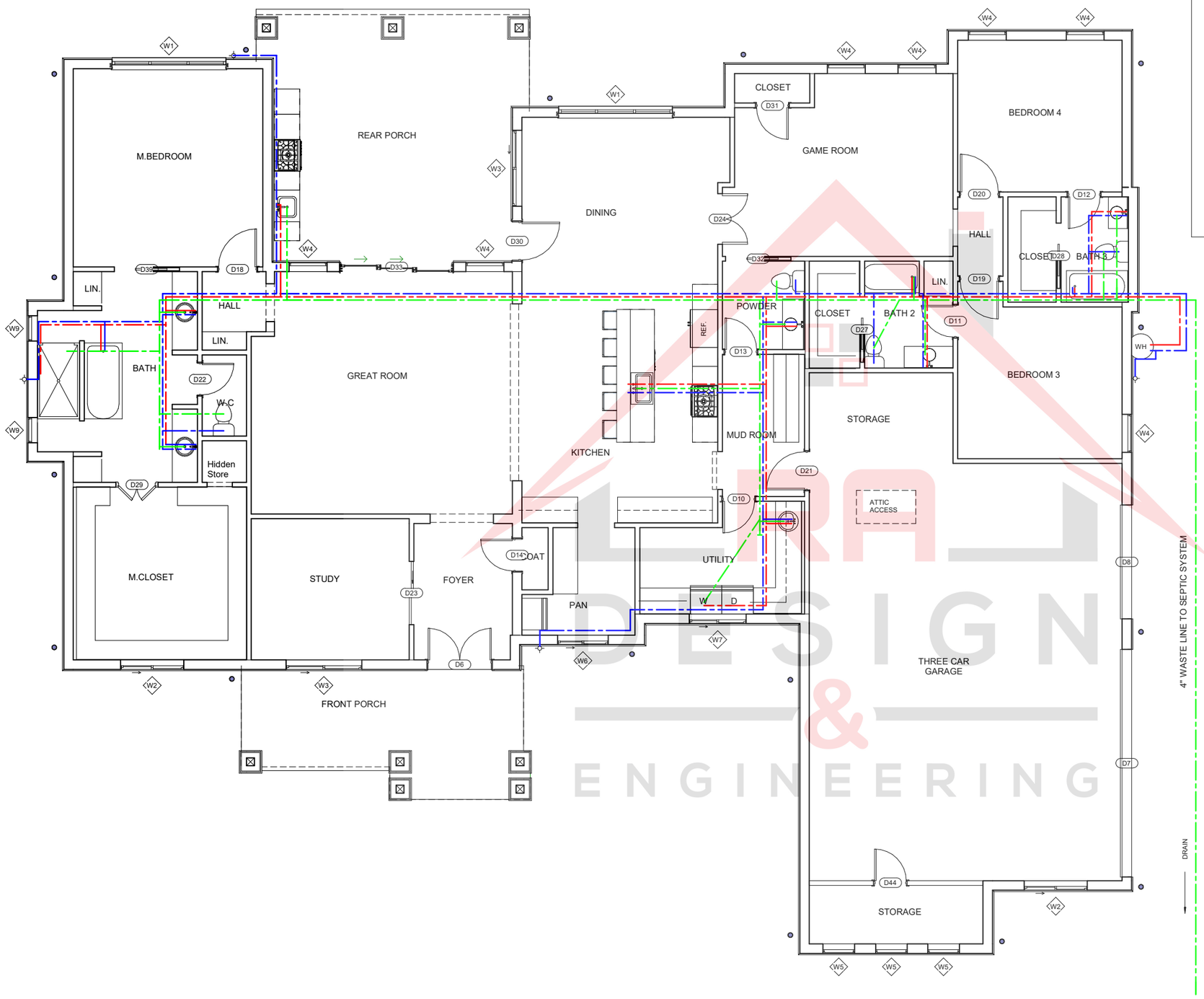

16475 CIRCLE DR

PERMIT SET

REV	DATE	REMARKS

SIGN DATE:

DATE:

SCALE:

DRAWN BY:

CKD BY:

PROJECT#:

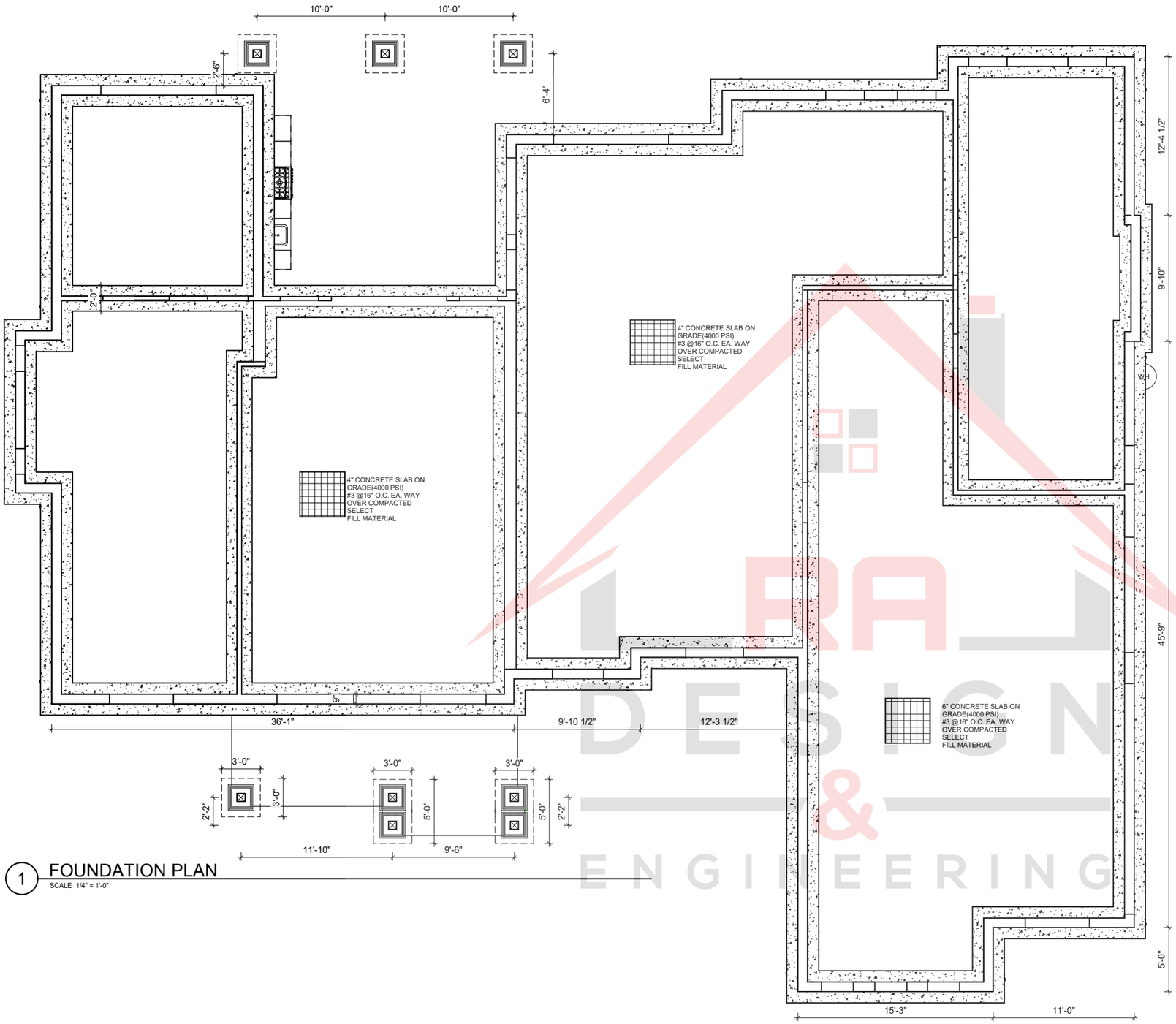

1 FOUNDATION PLAN

SCALE 1/4" = 1'-0"

Foundation Note

1. FOOTINGS ARE TO BEAR ON UNDISTURBED LEVEL SOIL DEVOID OF ANY ORGANIC MATERIALS AND STEPPED AS REQUIRED TO MAINTAIN THE REQUIRED DEPTH BELOW THE FINAL GRAGE.
2. SOIL BEARING PRESSURE ASSUMED TO BE 1500 PSI.
3. ANY FILL UNDER GRADE SUPPORTED SLABS TO BE A MINIMUM OF 4" GRANULAR MATERIAL COMPACTED TO 95%.
4. CONCRETE:
   - BASEMENT WALLS & FOUNDATIONS NOT EXPOSED TO WEATHER: 3000 PSI
   - BASEMENT & INTERIOR SLABS ON GRADE: 3000 PSI
   - BASEMENT WALLS & FOUNDATIONS EXPOSED TO THE WEATHER: 3000 PSI

(AS PER U.B.C. APPENDEX CHPT. TABLE A-26-A)

5. CONCRETE SLABS TO HAVE CONTROL JOINTS AT 25' (MAXIMUM) INTERVALS EACH WAY.
6. CONCRETE SIDEWALKS TO HAVE TOOLED JOINTS AT 5' O.C. (MINIMUM)
7. REINFORCED STEEL TO BE A-615 GRADE 40. WELDED WIRE MESH TO BE A-185.
8. EXCAVTE THE SITE TO PROVIDE A MINIMUM OF 18" CLEARANCE UNDER ALL GIRDERS.
9. COVER ENTIRE CRAWLSPACE WITH 6 MIL BLACK "VISQUEEN" AND EXTEND UP FDTN. WALLS TO P.T. MUDSILL.
10. PROVIDE A MINIMUM OF 1 SQ. FT. OF VENTILATION AREA FOR EACH 150 SQ.FT. OF CRAWLSPACE AREA. VENTS ARE TO BE CLOSABLE WITH OPENINGS IN CORROSIVE RESISTANT SCREEN. POST NOTICE RE: OPENING VENTS ARE THE ELECTRICAL PANEL.
11. ALL WOOD IN CONTACT WITH CONCRETE TO BE PRESSURE TREATED OR PROTECTED WITH 55# ROLL ROOFING.
12. BEAM POCKETS IN CONCRETE TO HAVE 1/2" AIRSPACE AT SIDES AND ENDS WITH A MINIMUM BEARING OF 3".
13. PROVIDE CRAWLSPACE DRAIN AS PER 2910 OF UBC.
14. WATERPROOF BASEMENT WALLS BEFORE BACKFILLING PROVIDING A4" PERFORATED DRAIN TILE BELOW THE TOP OF THE FOOTING.
15. BACKFILL FORMS, SHORING AND POURING METHODS MUST CONFORM TO UP TO DATE AC.I STANDARDS.
16. DAY STRENGTH AND NOT BEFORE STRUCTURAL FLOOR FRAMING (INCLUDING SUB-FLOOR) IS IN PLACE. (FRAMING MUST BE FULLY NAILED AND ANCHORED)
17. ALL CONCRETE IN FOUNDATION SHALL DEVELOP A MIN. COMPRESSION STRENGTH OF 3000 PSI IN 28 DAYS.
18. SINGLE STORY AND TWO STORY STRUCTURES SHALL HAVE A FOOTING 18" BELOW THE FINISHED GRADE LINE. A THREE STORY STRUCTURE SHALL HAVE A FOOTING AT 24" BELOW FINISHED GRADE

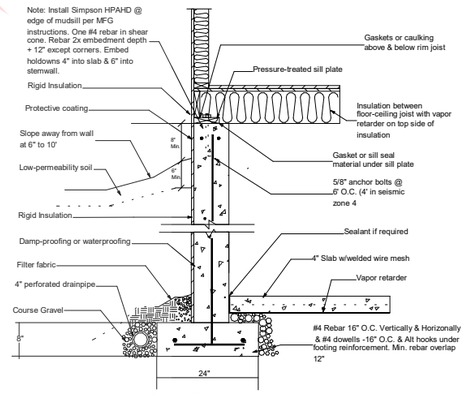

Concrete Basement Wall
W/exterior insulation

16475 CIRCLE DR

PERMIT SET

REV	DATE	REMARKS

SIGN DATE:

DATE:

SCALE:

DRAWN BY:

CKD BY:

PROJECT#:

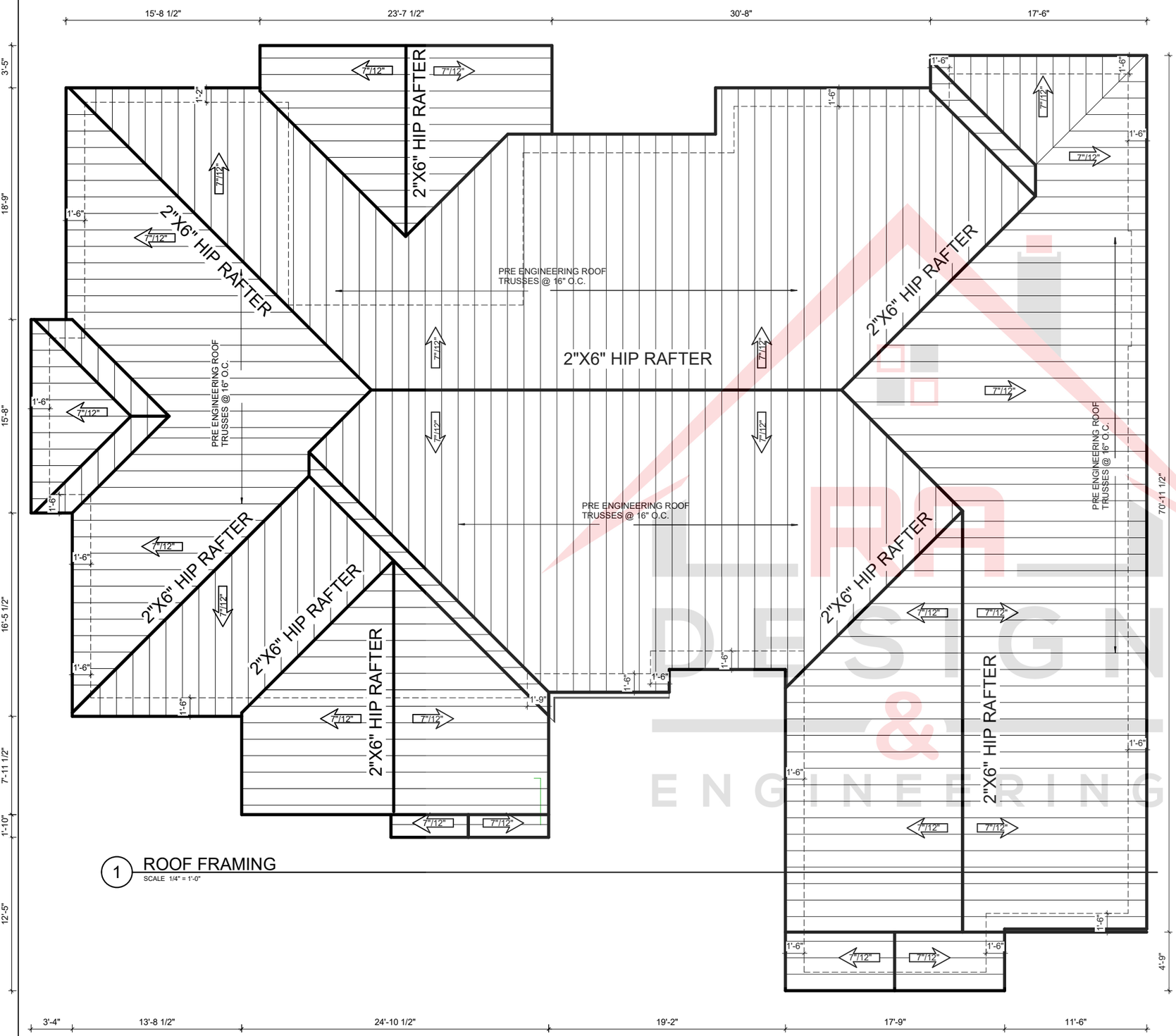

1 ROOF FRAMING
SCALE 1/4" = 1'-0"

WOOD TRUSSES:

1. APPROVAL. TRUSS FABRICATOR TO PROVIDE PREFABRICATED HANGERS AS REQUIRED.
2. WOOD TRUSSES SHALL BE BRACED AND ERECTED IN ACCORDANCE WITH THE "TRUSS PLATE INSTITUTE" HANDLING, INSTALLING & BRACING OF WOOD TRUSSES: COMMENTARY AND RECOMMENDATIONS, HIB (LATEST EDITION). BRACING IN THE PLANE OF THE WEB MEMBERS:
   A) THE TRUSS FABRICATOR SHALL PROVIDE AND LOCATE CONTINUOUS LATERAL BRACING FOR EACH TRUSS WEB MEMBER AS REQUIRED.
   B) LATERAL BRACING SHALL BE RESTRAINED BY DIAGONAL BRACING (MIN. 2" THICK NOMINAL LUMBER). THIS BRACING IS TO BE CONTINUOUS.
   C) A MINIMUM OF TWO ROWS OF DIAGONAL BRACING IS REQUIRED, ONE AT EACH VERTICAL WEB MEMBER CLOSEST TO BEARING LOCATIONS.
3. THE BOTTOM CHORDS SHALL BE BRACED BY CONTINUOUS LATERAL BRACING (MIN. 2"x4") SPACED AT 6 FEET MAXIMUM NAILED TO TOP OF THE BOTTOM CHORD. DIAGONALS PLACED AT 45 TO THE LATERAL BRACES SHALL BE LOCATED AT EACH END, IF BUILDING EXCEEDS 60 FEET IN LENGTH, DIAGONAL BRACING SHOULD BE REPEATED AT 20 FEET INTERVALS.
4. TOP CHORD BRACING: IF PLYWOOD DECKING IS APPLIED DIRECTLY TO TOP CHORD, PROPERLY LAPPED AND NAILED TO DEVELOP DIAPHRAGM ACTION. BRACING IS NOT REQUIRED.
   DESIGN, FABRICATION AND INSTALLATION OF WOOD TRUSSES AND SHEET METAL CONNECTORS SHALL BE IN ACCORDANCE WITH THE FOLLOWING STANDARDS:
   A) DESIGN SPECIFICATION FOR METAL PLATE CONNECTED WOOD ROOF TRUSSES (TPI LATEST EDITION).
   B) BRACING WOOD TRUSSES: COMMENTARY AND RECOMMENDATIONS (BWT LATEST EDITION).
   C) HANDLING AND ERECTING WOOD TRUSSES: COMMENTARY AND RECOMMENDATIONS (HET LATEST EDITION).

SHOP DRAWINGS:

1. SUBMIT MIN (4) COPIES OF EACH REQUIRED SUBMITTAL, (1) COPY OF WHICH WILL BE KEPT IN THIS OFFICE.
2. ALLOW 5 WORKING DAYS FOR REVIEW TIME.

GENERAL BEAM SCHEDULE NOTES:

1. SCHEDULED HOOPS OR STIRRUPS SHALL BE PLACED AT EACH END OF BEAM UNLESS OTHERWISE NOTED.
2. BUNDLE ALL STRUCTURAL BEAM TOP BARS IN PAIRS OVER SUPPORT WITH TOP BARS FROM ADJACENT BEAMS.
3. ALL CONCRETE BEAMS OTHER THAN THOSE WITH THE PREFIX TB SHALL BE POURED PRIOR TO PLACING BLOCK BELOW.
4. ALL TIE BEAM REINFORCING SHALL EXTEND INTO SPAN OF ANY ADJACENT STRUCTURAL BEAM AS PER BENDING DIAGRAM.
5. TIE BEAM SCHEDULED DEPTHS ARE MINIMUM AND MAY BE INCREASED (8" MAXIMUM) TO FIT BLOCK WORK.
6. ALL ADDED LONGITUDINAL BEAM REINFORCING SHALL EXTEND 6" MINIMUM INTO SUPPORT UNLESS NOTED OTHERWISE.
7. PROVIDE CORNER BARS AT ALL CONCRETE TIE BEAM INTERSECTIONS. BARS SHALL BE SAME SIZE AND QUANTITY AS BEAM REINFORCING, EXTENDING 48 BAR DIAMETER.

WOOD TRUSS NOTES

TRUSS SYSTEM TO SUPERSTRUCTURE CONNECTIONS, ANCHORAGE & LATERAL LOADS HAVE BEEN ADDRESSED ACCORDING TO DETAILS PROVIDED AS PER F.B.C.

TRUSS MANUFACTURER SHALL SUBMIT THREE (3) COPIES OF SHOP DRAWINGS AND ENGINEERING CALCULATIONS SIGNED & SEALED BY A FLORIDA REGISTERED ENGINEER OF THEIR TRUSS DESIGN FOR REVIEW, PLUS ONE ADDITIONAL COPY FOR THE ARCHITECT'S REVIEW PRIOR TO FABRICATION. SHOP DRAWINGS ARE TO SHOW WIND UPLIFTS @ ALL BEARING PTS.

PROVIDE HURRICANE STRAPS AS SHOWN.

ALL TRUSSES SHALL COMPLY WITH FBC 2319.17.2.1.1. & TRUSS UPLIFTS WERE DESIGNED IN CONFORMANCE W/ ASCE 7-10.

SHEATHING NOTE:

FASTEN 5/8" CDX PLYWOOD SHEATHING TO ROOF STRUCTURE W/ 10d RSN NAILS @ 6" O.C. MAX. IN THE FIELD OVER ALL SUPPORTS AND @ 4" O.C. AT PERIMETER OVER ALL SUPPORTS (STAGGER ALL JOINTS).

NAIL SHEATHING TO 2x4 SUBFASCIA @ 4" O.C. AROUND ENTIRE PERIMETER.

PROVIDE CONTINUOUS 2X4 BLOCKING AT ALL RIDGES.

BRACING NOTE:

PROVIDE HORIZONTAL 2x4 'RAT RUNS' RUNNING PERPENDICULAR TO TRUSSES @ TRUSS DIAGONALS EXCEEDING 6'-0" IN LENGTH, & NAILED TO EACH TRUSS W/ 2-16d NAILS. TERMINATE BRACES INTO SOLID BLOCKING OR NAILERS FIRMLY SECURED TO STRUCTURE @ DISCONTINUOUS ENDS (6'-0" O.C. MAX. SPACING)

FURRING STRIPS SECURED TO EA. TRUSS @ 16" O.C. & FIRMLY SECURED TO NAILERS SECURED TO STRUCTURE @ DISCONTINUOUS ENDS SATISFIES THE REQUIREMENTS FOR BOTTOM CHORD BRIDGING & PLYWOOD SHEATHING SATISFIES THE TOP CHORD BRIDGING REQUIREMENTS.

LERA DESIGN & ENGINEERING

16475 CIRCLE DR

PERMIT SET

REV	DATE	REMARKS

SIGN DATE:
DATE:
SCALE:
DRAWN BY:
CKD BY:
PROJECT#:

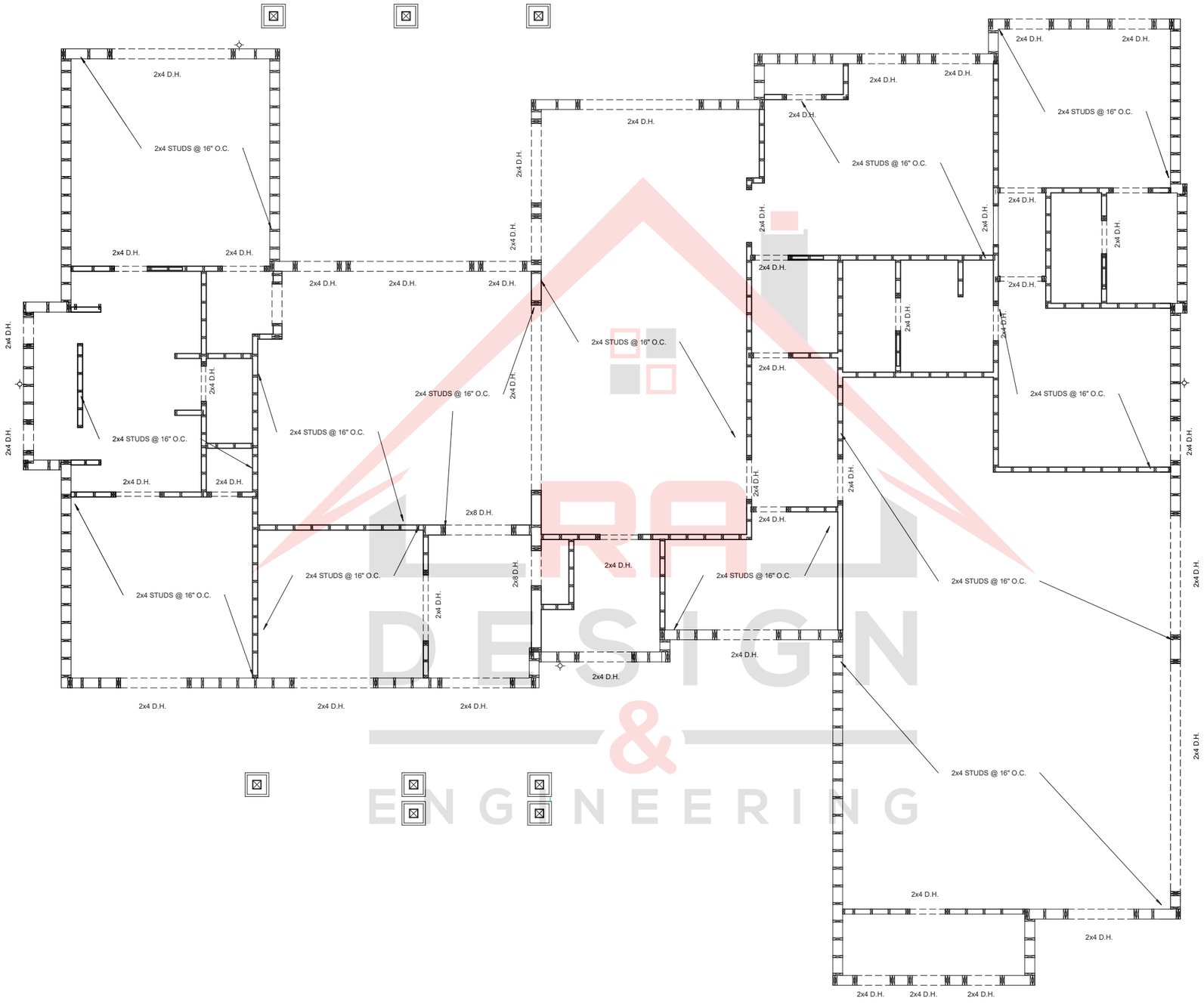

1 WALL FRAMING
SCALE 1/4" = 1'-0"

RA DESIGN & ENGINEERING

16475 CIRCLE DR
PERMIT SET

REV	DATE	REMARKS

SIGN DATE:
DATE:
SCALE:
DRAWN BY:
CKD BY:
PROJECT#:

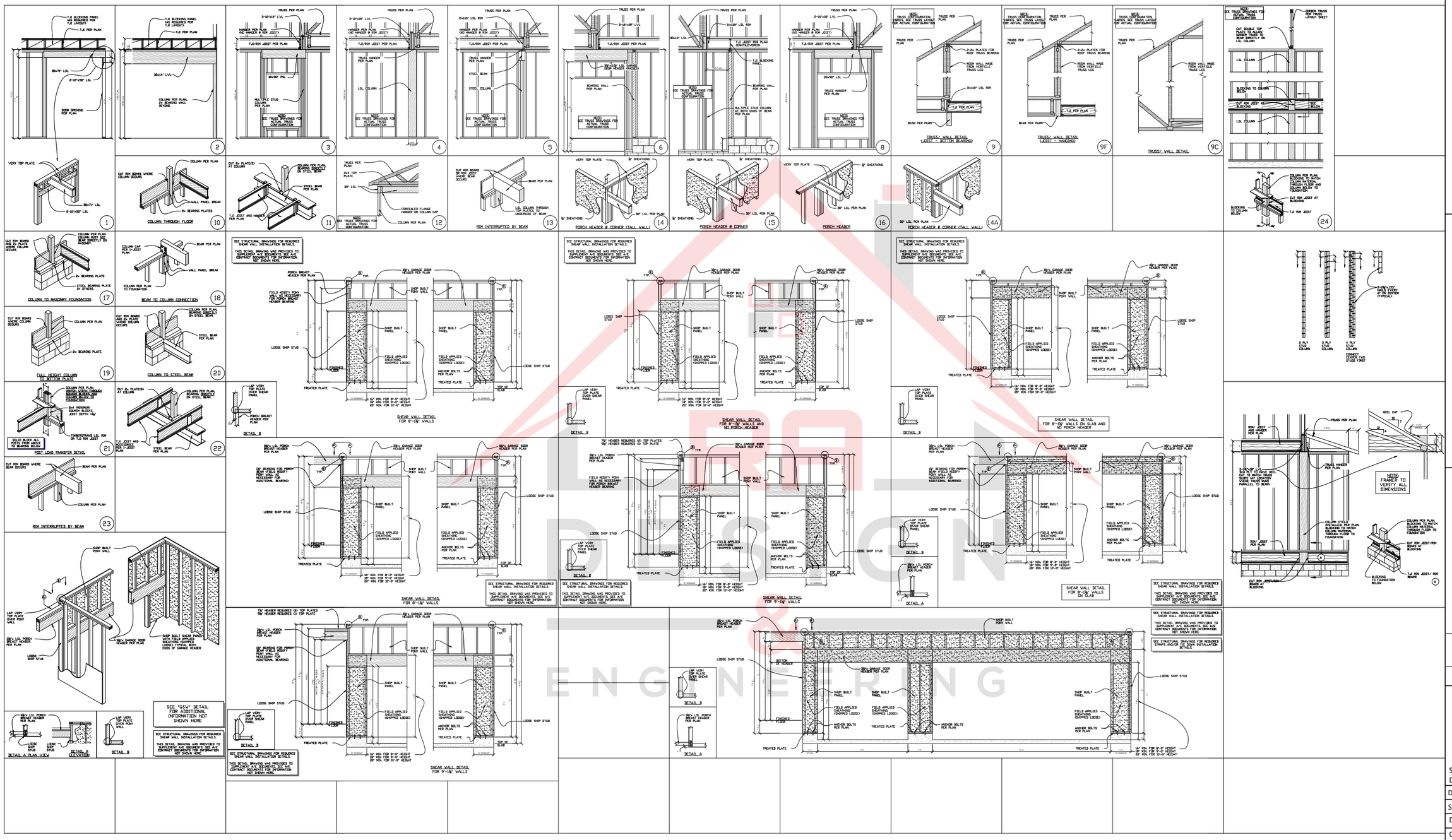

16475 CIRCLE DR

PERMIT SET

REV	DATE	REMARKS

SIGN DATE:

DATE:

SCALE:

DRAWN BY:

CKD BY:

PROJECT#: